Urinal & Flushometer Combo

WEUS-1000.1020-0.125-E-CP

Product description

0.125 gpf, Dual-Filtered Bypass, Polished Chrome Finish, Fixture Connection Top Spud, Single Flush, 1” Straight Control Stop, SU-1009 Urinal and ROYAL 186 Flushometer.

Compliances & Certifications

(ADA Compliant*, BREEAM Water Credit, CalGreen Compliant, cUPC Green Certified, EPD, Green Globes Water, HPD, IAPMO, LEED Credit, LEED HPD, LEED Water, Satisfies LEED Credits, EPA WaterSense Listed, WELL Building Standard)

Code 10001020

Downloads

- Standard Spud Urinal Installation Instructions.pdf
- Royal Exposed Installation Instructions.pdf
- SS:ST:SU:WETS:WEUS Fixtures Repair and Maintenance Guide.pdf
- Fixture Brochure.pdf
- Additional Downloads

Videos

- Sloan – Company Overview

WARNING: Cancer and Reproductive Harm – www.P65Warnings.ca.gov

Sloan 10500 Seymour Ave, Franklin Park 800.982.5839 sloan.com

Details

- Flush Volume: 0.125 gpf (0.5 lpf)

Features

- Complete urinal system including Sloan flushometer Designed to maximize performance
- Thorough washdown flushing action
- Durable, hygienic vitreous china construction
- Vandal resistant stainless steel strainer included
- IAPMO certified to meet or exceed ASME A112.19.2 standards
- Water Sense listed by EPA that qualifies for most rebate programs
- Meets ADA guidelines and ANSI A117.1 requirements when installed accordingly

Components

- Flushometer: Code 3912721
- Urinal: Code 1101009

Warranty

View Warranty Information

Notes

All information contained within this document subject to change without notice.

*Compliant with ADA accessibility requirements when installed according to ADA standards.

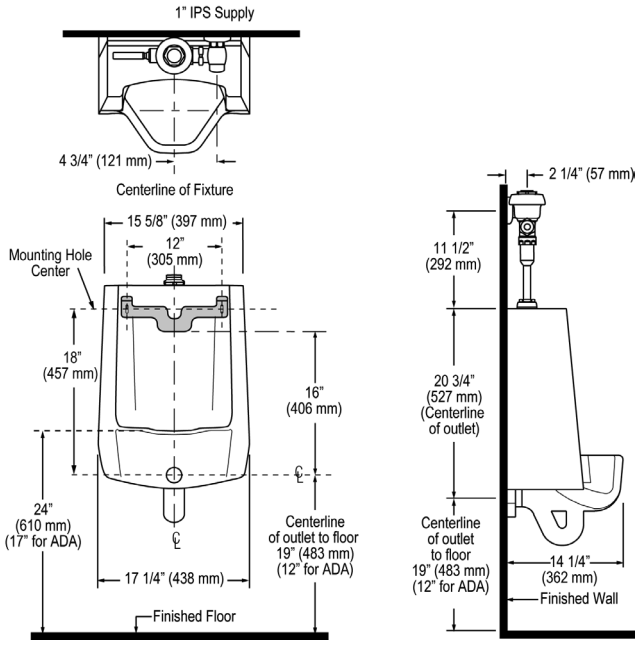
1" IPS Supply
4 3/4" (121 mm)
Centerline of Fixture
15 5/8" (397 mm)
12" (305 mm)
Mounting Hole Center
18" (457 mm)
16" (406 mm)
24" (610 mm) (17" for ADA)
Centerline of outlet to floor 19" (483 mm) (12" for ADA)
17 1/4" (438 mm)
Finished Floor
2 1/4" (57 mm)
11 1/2" (292 mm)
20 3/4" (527 mm) (Centerline of outlet)
Centerline of outlet to floor 19" (483 mm) (12" for ADA)
14 1/4" (362 mm)
Finished Wall