AER-DEC® Sink

AD-83000 CLARK STREET®

Product description

AER-DEC® 3-Station Sink.

Compliances & Certifications

(ADA Compliant*, BAA Compliant, IGC 156, cUPC Certified)

Code AD-83000 Clark Street®

Downloads

- AER-DEC® Clark Street® Installation Instructions.pdf
- AER-DEC® Clark Street® Repair and Maintenance Guide.pdf
- AER-DEC® Brochure.pdf
- Sinks - Full Line Brochure.pdf
- Additional Downloads

Videos

- AER-DEC Integrated Sink

WARNING: Cancer and Reproductive Harm – www.P65Warnings.ca.gov

Sloan 10500 Seymour Ave, Franklin Park 800.982.5839 sloan.com

Details

- Material:
  - Corian
  - Quartz
- Mounting: Wall-Mounted
- Width: 90” (2286mm)

Features

Three-Station Lavatory System with the following features:

- Built in patented airdam technology that eliminates backsplash and updrafts
- A monolithic console available in Corian® or quartz
- Basins can be sized to project requirements
- Many customization options - see Configurator.Sloan.com for all options
- Deck mounted dryer with HEPA filter technology minimizes the risk of slip and fall from water on the bathroom floor
- ADA compliant design and IAPMO certification for commercial load and drain requirements
- Includes deck mounted Clark Street® style hand dryers standard, available in all of Sloan’s finishes
- Pairs great with Sloan Clark Street® faucets and soap dispensers, available in all of Sloan’s finishes

Colors

For a complete list of Corian® colors:
http://www.corian.com/-colors-of-corian-r-
For a complete list of Corian® quartz colors:
https://www.corianquartz.com/-colors-of-quartz-

Recommended specifications

Sloan AER-DEC Integrated Sink System model no. AD 8X000 Clark Street. Product to be fabricated out of Corian or quartz. Supplied with Sloan EHD-410 deck mounted hand dryer, Sloan EBF/ETF 415/410 Series automated sensor faucet, and Sloan ESD-410 sensor operated foam soap dispenser. Supplied with Basin that includes patented Airdam for hand dryer performance and HEPA filter included with hand dryer. Sink design to be ADA compliant. Supplied with enclosure.

Suggested Faucets

This sink is compatible with Optima®

Warranty

View Warranty Information

Notes

All information contained within this document subject to change without notice.

*Compliant with ADA accessibility requirements when installed according to ADA standards.

Many customization options - see architectural worksheet for all options.

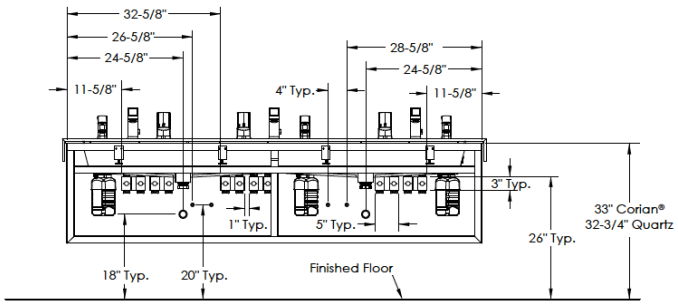

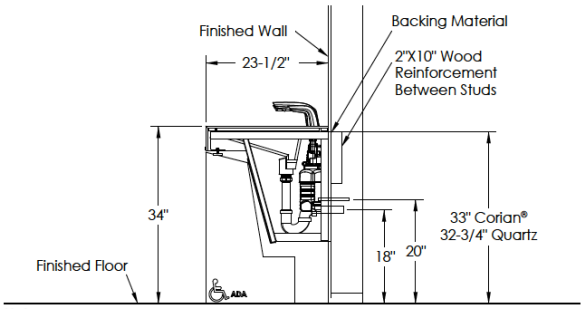

Notes:

- Backing material should equal thickness of drywall, 1/2" min.
- Angled enclosure shown, rough-in dimensions for vertical enclosure are the same.