**Sloan® Manual Flushometer**

# SLOAN 113-1.6-CP-YJ

## Product description

1.6 gpf, Polished Chrome Finish, Fixture Connection Top Spud, Single Flush, Split Ring Pipe Support, Sloan® Exposed Manual Water Closet Flushometer.

## Compliances & Certifications

(ADA Compliant*, BAA Compliant, IAPMO, Made in the USA, cUPC Certified)

**Code 3780228**

## Finish

Polished Chrome (CP)

## Downloads

- Sloan Exposed Installation Instructions.pdf
- Sloan Exposed (Spanish) Installation Instructions.pdf
- Control Stop Repair and Maintenance Guide.pdf
- Flush Connections Flanges Repair and Maintenance Guide.pdf
- Tail Piece Repair and Maintenance Guide.pdf
- Retrofits Brochure.pdf
- Additional Downloads

## Videos

- Sloan – Company Overview



WARNING: Cancer and Reproductive Harm – www.P65Warnings.ca.gov

Sloan 10500 Seymour Ave, Franklin Park 800.982.5839 sloan.com

## Details

- Flush Volume: 1.6 gpf (6.0 lpf)
- Finish: Polished Chrome (CP)
- Valve: Diaphragm
- Valve Body Material: Semi-red Brass
- Fixture Type: Water Closet
- Fixture Connection: Top Spud
- Rough-in Dimension: 16” (406mm)
- Spud Coupling: 1.5” (38mm)
- Supply Pipe: 1” (25mm)
- Pipe Support: Split Ring (YJ)

## Features

- Flush volumes start as low as 1.28 gpf/4.8 Lpf
- Water conservation is aided by the ADA-compliant, non-hold-open handle, which prevents toilet from exceeding intended flush volume
- Flush accuracy is controlled by CID™ technology, also enhancing water efficiency
- Integrity of the product is maintained with the vandal-resistant stop cap
- Durability is facilitated with high copper, low zinc brass castings for dezincification resistance
- Adjustable tailpiece to accommodate different height requirements
- High chloramine resistant PERMEX® Synthetic Rubber Diaphragm with Linear Filtered Bypass and Vortex Cleansing Action
- Valve body, Cover, Tailpiece and Control Stop shall be in compliance with ASTM Alloy Classification for Semi-Red Brass
- Valve shall be in compliance to the applicable sections of ASSE 1037

## Recommended specifications

Valve Body, Cover, Tailpiece and Control Stop shall be in conformance with ASTM Alloy Classification for Semi-Red Brass. Valve shall be in compliance with the applicable sections of ASSE 1037 and ANSI/ASME 112.19.2.

## Valve Operating Pressure (Flowing)

15-80 psi (103 - 552 kPa). Specific fixtures may require greater minimum flowing pressure - consult manufacturer requirements.

## Warranty

View Warranty Information

## Notes

All information contained within this document subject to change without notice.

*Compliant with ADA accessibility requirements when installed according to ADA standards.

Looking for other variations of the SLOAN 113 product? View the general spec sheet with all options.
Find a compatible urinal for this flushometer.
Find a compatible water closet for this flushometer.
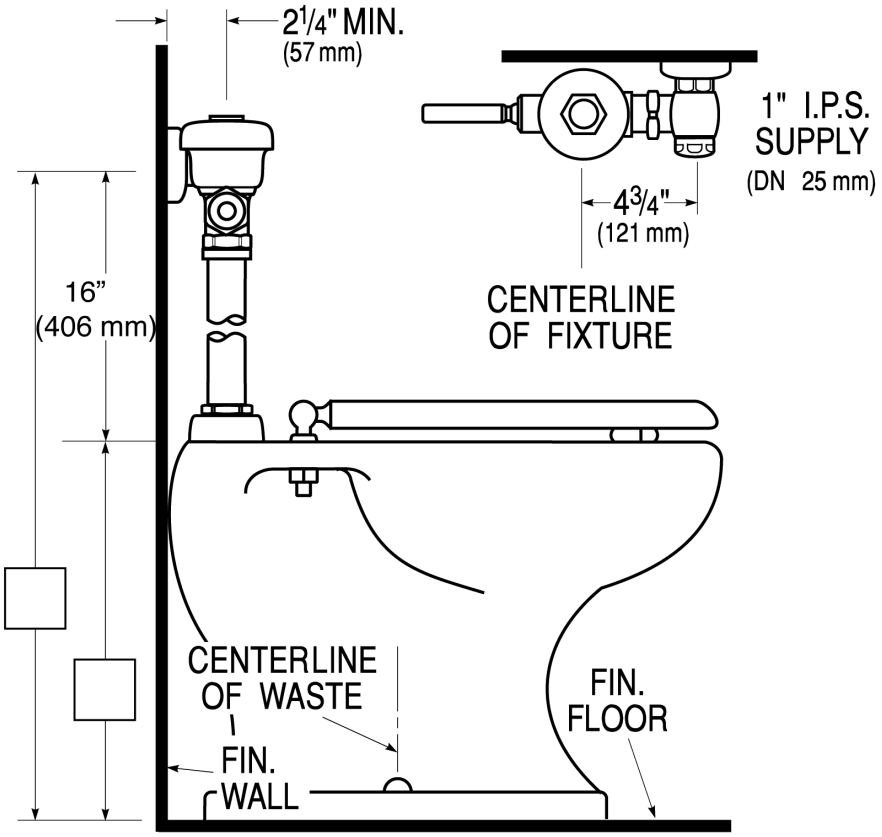
## Rough-in and line drawing