DropSpot™ Bottle Filler & Water Cooler

DRS120-CN

Product description

Carbon Neutral, DropSpot™ On-wall Bottle Filler with Bi-level Cooler.

Compliances & Certifications

(ASME A112.18.1 Compliant, Carbon Neutral^, FCC Compliant, IAPMO, IAPMO listed ASME, IGC 115, IGC 226, MA Approved, Meets Canada OBC and QBC, NSF-61/CAN-61, NSF-372 Lead Free, AB100, NSF/ANSI/CAN 61: Q ≤ 1.0, TAS, UL 399/ CSA C22.2 No.120, UL Certified (US and Canada), cUPC Certified)

Code 33820027T

Finish

Black (BLK)

Downloads

- DRS120_DRS125 Refrigerated Bi-level Cooler Installation Instructions.pdf
- DRS120_DRS125 Unrefrigerated Bi-level Cooler Installation Instructions.pdf
- FA3000 DRS110_115_120_125 Drop Down Filter Assembly Installation Instructions.pdf
- FC3000 Replacement Water Filter Cartridge Installation Instructions.pdf
- DropSpot Bottle Fillers and Water Coolers Brochure.pdf
- DropSpot™ Care and Cleaning Guide.pdf
- Additional Downloads

Videos

- Sloan DropSpot™ Bottle Fillers and Water Coolers
- Sloan DropSpot™ Bottle Fillers and Water Coolers Now at Wrigley Field

WARNING: Cancer and Reproductive Harm – www.P65Warnings.ca.gov

Sloan 10500 Seymour Ave, Franklin Park 800.982.5839 sloan.com

Details

- Mounting: On-wall
- Configuration: Bottle Filler with Bi-level Cooler
- Filter Option: Unfiltered (UNFIL)
- Refrigeration Option: Refrigerated (REF)
- Finish: Black (BLK)
- Chilling Capacity: 8.0 gph (30.3 Lph)
- Full Load Amps: 5.3
- Length: 19 (483mm)
- Width: 38 (965mm)
- Height: 39.6 (1006mm)
- Weight: 110lbs (50kg)
- Installation Location: Indoor
- Stations Served: 2
- Bottle Filler Water Flow Rate: Up to 1.2 gpm (4.5 Lpm)
- Bubbler Flow Rate: 0.3 gpm (1.1 Lpm)

Features

Sloan Bi-Level Bottle Filler Drinking Fountain Combo available in both Stainless and Black, filtered and unfiltered, refrigerated and unrefrigerated options.

- Touch-free sensor operated bottle filler with 20 second max run time, Up to 1.2 gpm fill rate for quick fill with laminar flow
- Versatile mounting style allows for left-high or right-high installation, ADA compliant when installed in accordance with applicable requirements
- All models IoT compatible with subscription to SC Argus® Pro SaaS - Remotely monitor water usage and receive filter replacement notifications, helping simplify maintenance across one or multiple facilities
- Schedule and document automated line flushes through SC Argus Pro to support water quality programs and reduce manual maintenance
- Backlit LED light that illuminates bottle filling area when sensor is activated, Soft ambient white light to indicate filter status
- Bottle Counter Display indicates the number of 16 oz plastic bottles saved as well as the ounces of water dispensed for water consumption tracking
- Rough-in matches other manufacturers' recommended rough-in locations for easy replacement
- Antimicrobial bubbler, push bar, and other components
- Drop-down door assembly provides easy access to filter
- Patent pending push bar activates at any touch point and

Recommended specifications

Sloan's DropSpot™ On-wall Bottle Filler with Bi-level Cooler Unfiltered Refrigerated black powder coat. Chilling capacity of 8.0 gph of 50F drinking water, based on 80F inlet water and 90F ambient. Unit shall be activated from an antimicrobial front pushbar using less than 5 pounds of force. Bubbler shall deliver a 0.3 gpm flow. Basin and cabinet shall be constructed from galvannealed steel with black powder coat finish. Bottle filler shall include sensor operated activation with a 20 second maximum run time. Bottle counter display indicates the number of 16 oz plastic bottles saved as well as the ounces of water dispensed for water consumption tracking. Unit shall include LED lights that illuminate the bottle filling area. Bottle filler housing construction shall be black galvannealed steel. Bottle filler shall provide up to 1.2 gpm flow rate with a laminar flow. Push bar shall be activated by any touch point on the bar and shall be opened by Sloan access key.

Power

- (Standard) 115VAC
- 60Hz
- 5.3A
- Provide Duplex Receptacle on GFCI Protected Circuit

Warranty

View Warranty Information

Notes

All information contained within this document subject to change without notice.

^To obtain the certificate for your carbon-neutral products, please reach out to Sloan's customer support:customer.service@sloan.com.

Rough-in and line drawing

DRS120-CN

Prior to roughing in, consult local, state, and federal codes for proper mounting height.

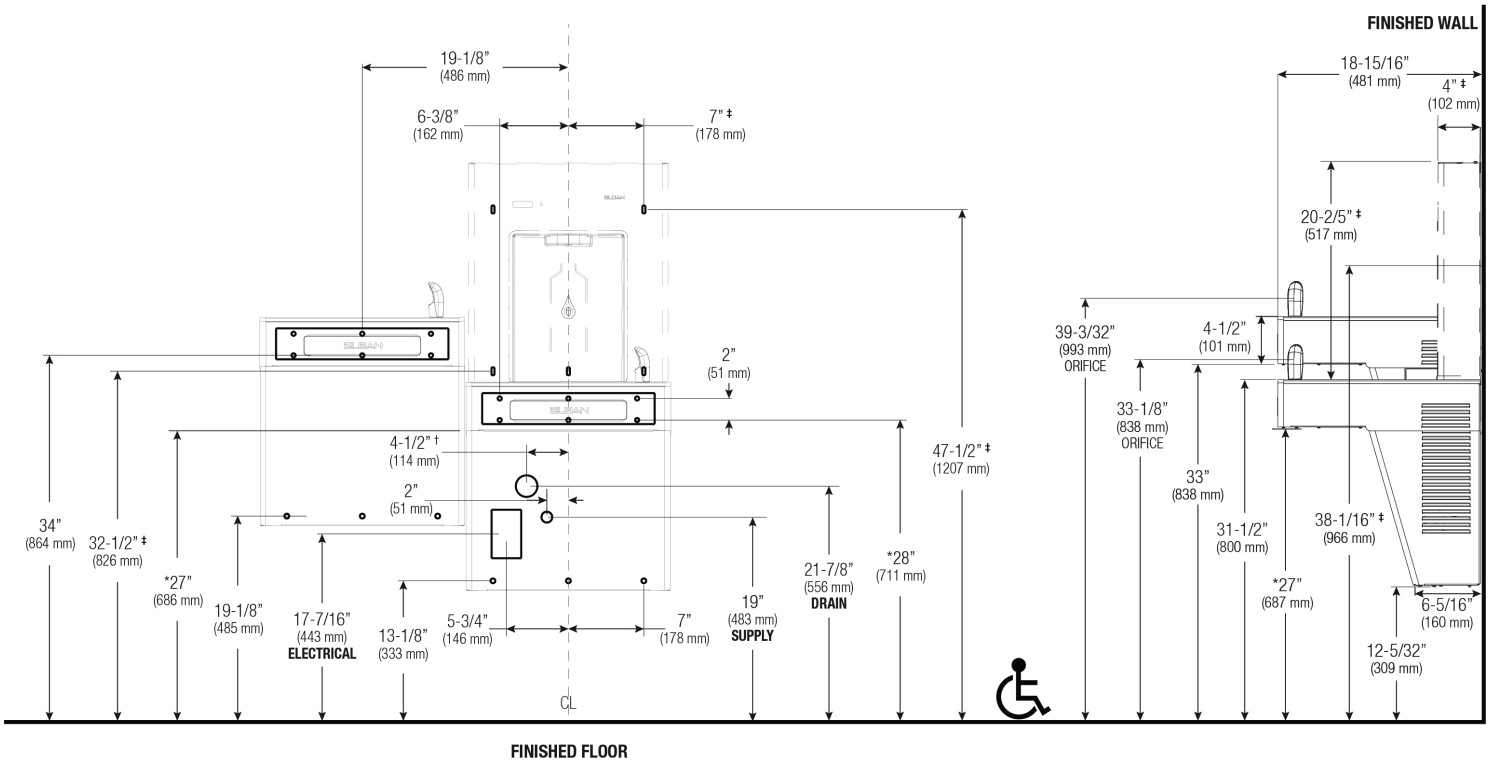

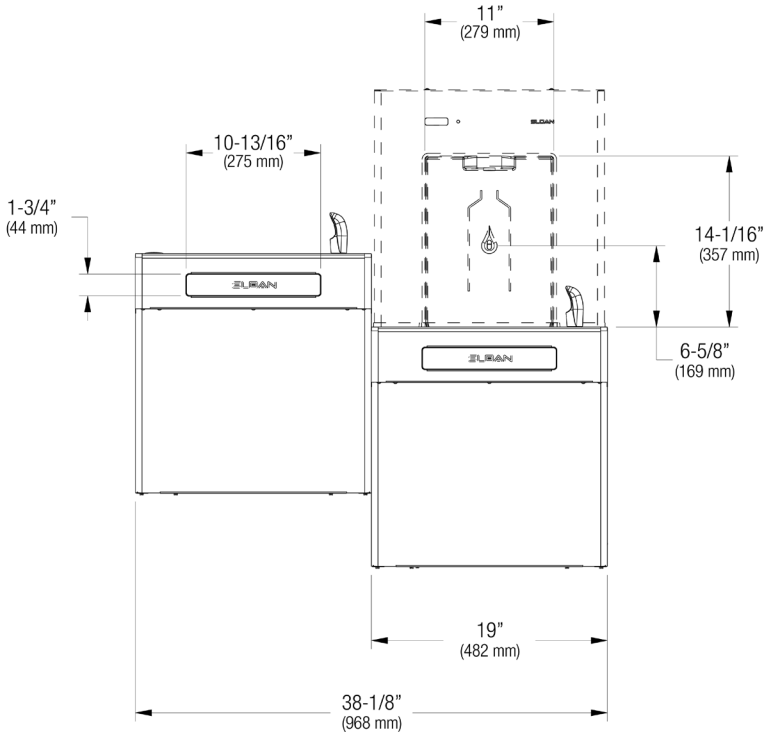

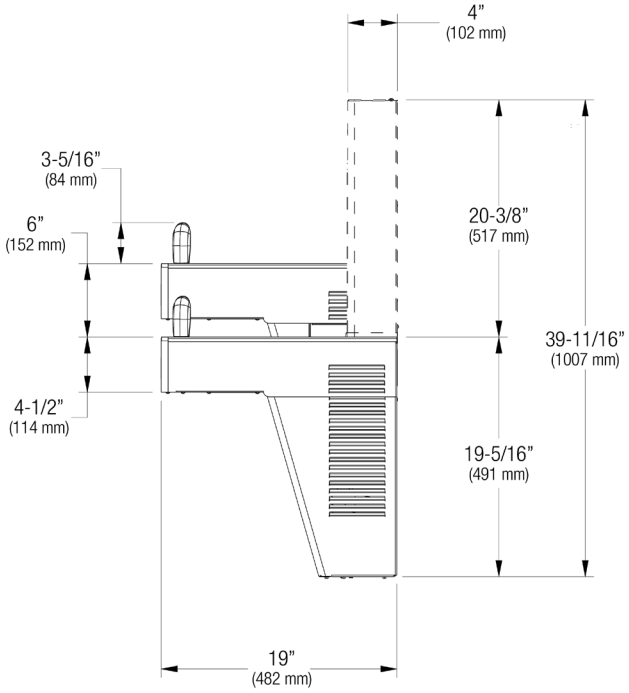

Sloan 10500 Seymour Ave, Franklin Park 800.982.5839 sloan.com