Urinal & Flushometer Combo

WEUS-1006.1010-1.0-CP

Product description

1.0 gpf, Dual-Filtered Fixed Bypass Diaphragm, Polished Chrome Finish, Fixture Connection Top Spud, Single Flush, SU-1009 Urinal and SLOAN 186 Flushometer.

Compliances & Certifications

(ADA Compliant*, EPD, HPD, IAPMO, cUPC Certified, WELL Building Standard)

Code 10061010

Downloads

- Standard Spud Urinal Installation Instructions.pdf
- Sloan Exposed Installation Instructions.pdf
- SS:ST:SU:WETS:WEUS Fixtures Repair and Maintenance Guide.pdf
- Fixture Brochure.pdf
- Additional Downloads

Videos

- Sloan – Company Overview

WARNING: Cancer and Reproductive Harm – www.P65Warnings.ca.gov

Sloan 10500 Seymour Ave, Franklin Park 800.982.5839 sloan.com

Details

- Flush Volume: 1.0 gpf (3.8 lpf)

Features

- Complete urinal system including Sloan flushometer Designed to maximize performance
- Thorough washdown flushing action
- Durable, hygienic vitreous china construction
- Vandal resistant stainless steel strainer included
- IAPMO certified to meet or exceed ASME A112.19.2 standards
- Meets ADA guidelines and ANSI A117.1 requirements when installed accordingly

Components

- Flushometer: Code 3782630
- Urinal: Code 1101009

Warranty

View Warranty Information

Notes

All information contained within this document subject to change without notice.

*Compliant with ADA accessibility requirements when installed according to ADA standards.

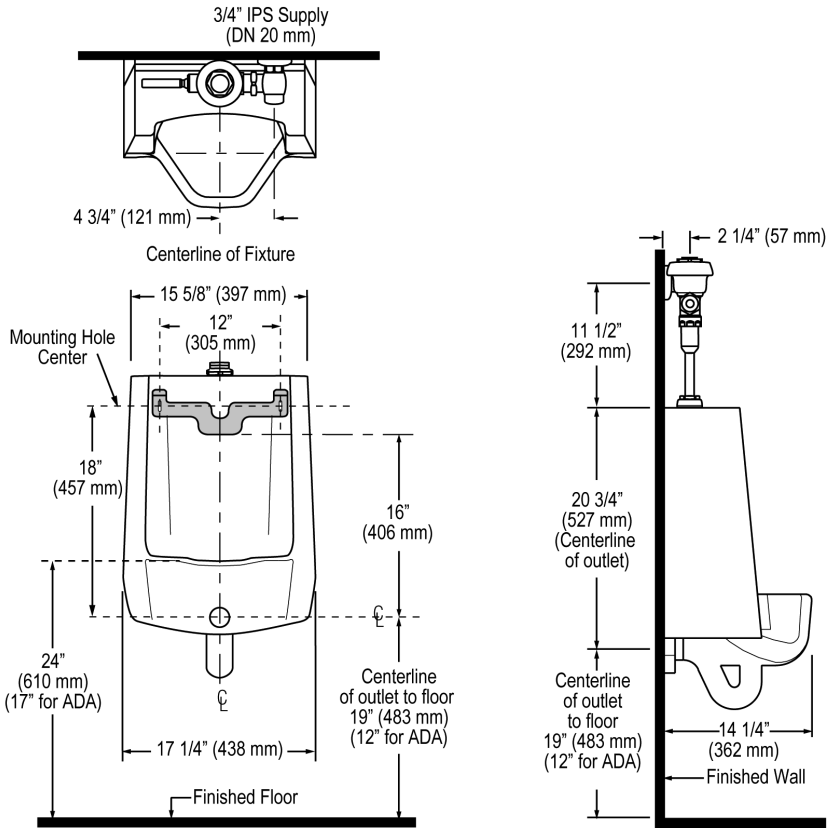
3/4" IPS Supply
(DN 20 mm)
4 3/4" (121 mm)
Centerline of Fixture
15 5/8" (397 mm)
12"
(305 mm)
Mounting Hole
Center
18"
(457 mm)
16"
(406 mm)
24"
(610 mm)
(17" for ADA)
Centerline
of outlet to floor
19" (483 mm)
(12" for ADA)
17 1/4" (438 mm)
Finished Floor
2 1/4" (57 mm)
11 1/2"
(292 mm)
20 3/4"
(527 mm)
(Centerline
of outlet)
Centerline
of outlet
to floor
19" (483 mm)
(12" for ADA)
14 1/4"
(362 mm)
Finished Wall