PWT™ Accessory

MCR-1001

Product description

PWT System Solenoid Operator Retrofit Kit.

Compliances & Certifications

(BAA Compliant)

Code 3375015

Downloads

- Programmed Water Technologies (PWT) Brochure.pdf
- Additional Downloads

Videos

- Sloan – Company Overview

WARNING: Cancer and Reproductive Harm – www.P65Warnings.ca.gov

Sloan 10500 Seymour Ave, Franklin Park 800.982.5839 sloan.com

Features

- 24 VAC retrofit solenoid kit used to convert hydraulic flushometers into electronic flushometers for use with PWT system controllers.
- Electronically controls water run-times to lavatory and shower fixtures
- 160 degrees F maximum water temperature
- Used in conjunction with MicroPlumb control modules to provide accurate control of lavatory or shower run times
- Seven models available
- 24 VAC retrofit solenoid kit used to convert hydraulic flushometers into electronic flushometers for use with PWT system controllers
- 24 VAC – 50/60 Hz operating voltage
- 8.4 Watts
- Coil Rating
- 1.1 AMP In Rush
- .65 AMP HOLDING
- 8.4 +/
- 10% OHMS @ 70°F
- Includes EL-128-A Cartridge

Warranty

View Warranty Information

Notes

All information contained within this document subject to change without notice.

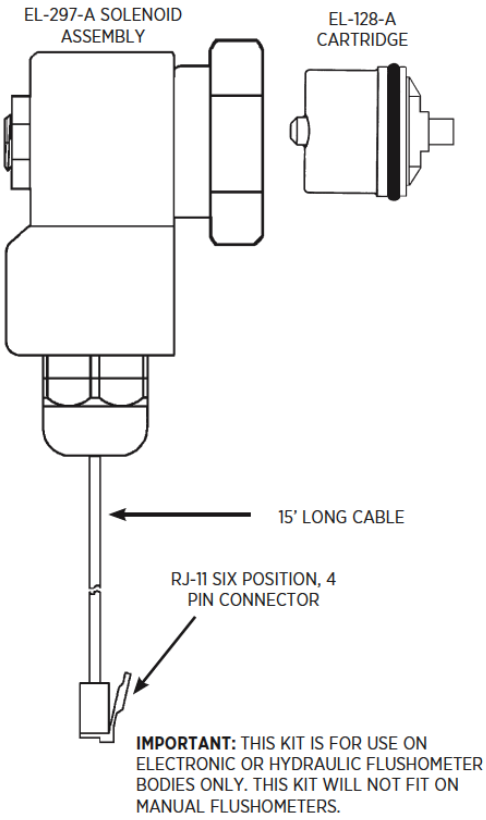
EL-297-A SOLENOID ASSEMBLY
EL-128-A CARTRIDGE
15' LONG CABLE
RJ-11 SIX POSITION, 4 PIN CONNECTOR
IMPORTANT: THIS KIT IS FOR USE ON ELECTRONIC OR HYDRAULIC FLUSHOMETER BODIES ONLY. THIS KIT WILL NOT FIT ON MANUAL FLUSHOMETERS.