G2 Sensor Flushometer

G2 8111-1.6-BN

Product description

1.6 gpf, Brushed Nickel Finish, Fixture Connection Top Spud, Single Flush, Battery, G2 Exposed Sensor Water Closet Flushometer.

Compliances & Certifications

(ADA Compliant*, BAA Compliant, BABAA Compliant, IAPMO, UL Certified (US), cUPC Certified)

Code 3250449

Finish

Brushed Nickel (BN)

Downloads

- G2 and ECOS Single Flush Optima Plus Valve Installation Instructions duplicate.pdf
- G2 Repair and Maintenance Guide.pdf
- Control Stop Repair and Maintenance Guide.pdf
- Additional Downloads

Videos

- PVD Special Finishes

WARNING: Cancer and Reproductive Harm – www.P65Warnings.ca.gov

Sloan 10500 Seymour Ave, Franklin Park 800.982.5839 sloan.com

Details

- Flush Volume: 1.6 gpf (6.0 lpf)
- Finish: Brushed Nickel (BN)
- Power Type: Battery
- Valve: Diaphragm
- Valve Body Material: Semi-red Brass
- Fixture Type: Water Closet
- Fixture Connection: Top Spud
- Rough-in Dimension: 11.5” (292mm)
- Spud Coupling: 1.5” (38mm)
- Supply Pipe: 1” (25mm)

Features

- Automatically operates by means of an infrared sensor with multiple-focused, lobular sensing fields for high and low target detection
- User-friendly, three-second flush delay
- Adjustable tailpiece
- High copper, low zinc brass castings for dezincification resistance
- Available in low consumption (1.6 gpf/6.0 Lpf), water saver (3.5 gpf/13.2 Lpf), and high efficiency (1.28 gpf/4.8 Lpf) models
- Valve body, Cover, Tailpiece and Control Stop shall be in compliance with ASTM Alloy Classification for Semi-Red Brass
- Valve shall be in compliance to the applicable sections of ASSE 1037

Recommended specifications

Valve Body, Cover, Tailpiece and Control Stop shall be in conformance with ASTM Alloy Classification for Semi-Red Brass. Valve shall be in compliance with the applicable sections of ASSE 1037 and ANSI/ASME 112.19.2.

Valve Operating Pressure (Flowing)

15-80 psi (103 - 552 kPa). Specific fixtures may require greater minimum flowing pressure - consult manufacturer requirements.

Battery Specifications

Usage	4-AA Battery Service Life†			
	14.5 yrs	12 yrs	7.2 yrs	6 yrs
per month	500	1,000	3,000	4,000
per day	25	50	150	200

† Service life varies according to actual usage and restroom conditions
Battery shelf life: Alkaline= ~10 years - Lithium= ~25 years

Warranty

View Warranty Information

Notes

All information contained within this document subject to change without notice.

*Compliant with ADA accessibility requirements when installed according to ADA standards.

Looking for other variations of the G2 8111 product? View the general spec sheet with all options.
Find a compatible urinal for this flushometer.
Find a compatible water closet for this flushometer.

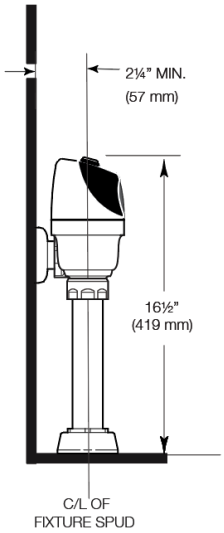

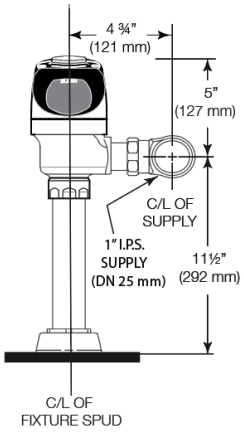

ALTERNATE ADA INSTALLATION
Lower water supply rough-in to 10" (254 mm) and mount grab bar at the 36" (914 mm) maximum allowed height (top of grab bar at 36").

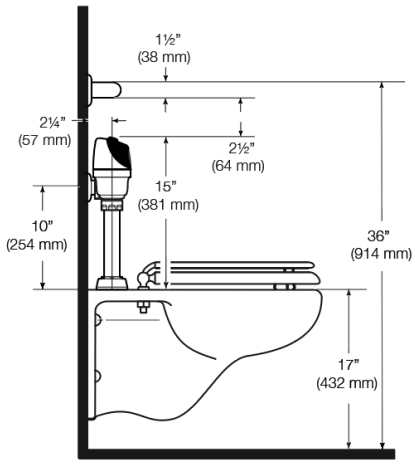

WHEN INSTALLING IN A HANDICAP STALL:
Per the ADA Guildlines (section 604.9.4) it is recommended that the grab bars be split or shifted to the wide side of the stall. If grab bars must be present over the valve, use the alternate ADA installation as shown to the right.