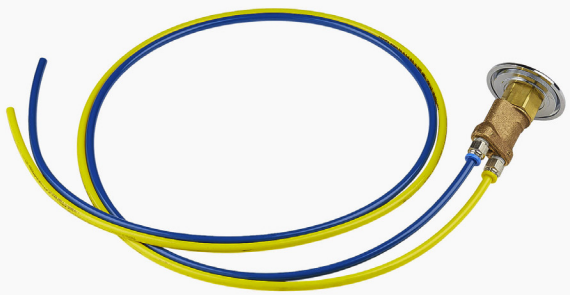

**Royal® Accessory**

# HY-108-A HYDRAULIC PUSH BUTTON

**Product description**

Metal Button Panel Mount (MBPM) Push Button Assembly.

**Code 0318119**

## Downloads

- Sloan 900 Hydraulic Concealed Installation Instructions.pdf
- Series 900 Flushometers Repair and Maintenance Guide.pdf
- Programmed Water Technologies (PWT) Brochure.pdf
- Additional Downloads

## Videos

- Sloan – Company Overview



WARNING: Cancer and Reproductive Harm – www.P65Warnings.ca.gov

Sloan 10500 Seymour Ave, Franklin Park 800.982.5839 sloan.com

## Features

Metal Button Panel Mount (MBPM) Push Button Assembly for use with Sloan Series 900 Hydraulic Flushometers. Recommended for installation on Handicap and similar Stainless Steel Prison Fixtures where a front access panel is provided.Hydraulically Operated Push Button Assembly that includes the following features:

- ADA Compliant Non-Hold-Open feature type Actuator
- Spring Loaded, Metal Button
- Two 48" (914 mm) long flexible "nylon" tubing for connection to a Series 900 Hydraulic Flushometer

## Warranty

View Warranty Information

## Notes

All information contained within this document subject to change without notice.

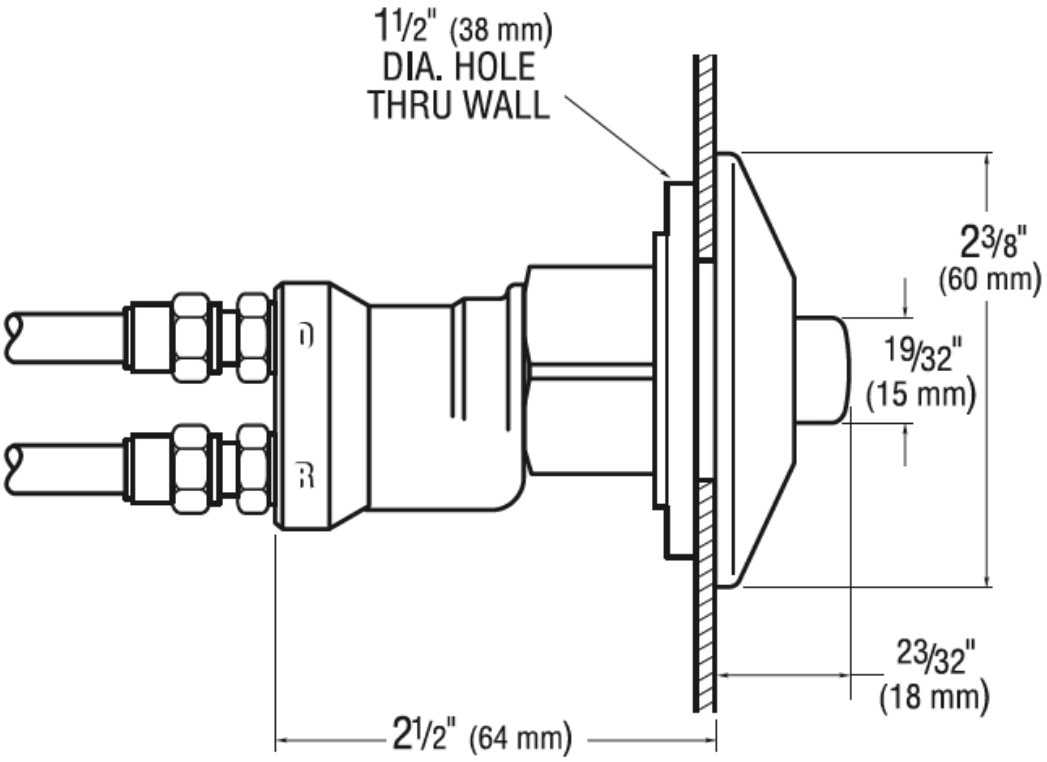
1 1/2" (38 mm)
DIA. HOLE
THRU WALL
2 3/8"
(60 mm)
19/32"
(15 mm)
23/32"
(18 mm)
2 1/2" (64 mm)