Optima® Sensor Faucet

EAF-275-SOL-BB-0.5GPM-AER-IQ-FCT

Product description

Solar Power Supply, Mixer Not Included, Brushed Brass Finish, 0.5 gpm, Aerated Spray, Infrared Sensor, Optima® Solar-Powered Deck-Mounted Mid Body Faucet.

Compliances & Certifications

(ADA Compliant*, IAPMO, UPC Low Lead Certified)

Code 33351359

Finish

Brushed Brass (BB)

Downloads

- EAF 200_225_250_275 (SP) Installation Instructions.pdf
- Faucet Spray Heads Maintenance Guide.pdf
- Optima Plus EAF 275 Repair and Maintenance Guide.pdf
- Faucet and Soap Dispenser Brochure.pdf
- Additional Downloads

Videos

- Sloan Finishes

WARNING: Cancer and Reproductive Harm – www.P65Warnings.ca.gov

Sloan 10500 Seymour Ave, Franklin Park 800.982.5839 sloan.com

Details

- Flow Rate: 0.5 gpm (1.9 Lpm) (0.5GPM)
- Spray Type: Aerated (AER)
- Sensor Type: Infrared
- Mounting Type: Single Hole
- Power Supply: Solar (SOL)
- Temperature Mixer: Mixer Not Included
- Finish: Brushed Brass (BB)
- Factory Default Timeout: 30s
- Factory Default GPC: 0.25 gpc

Features

Commercial Grade, ADA Compliant, Electronic, Sensor-Activated, Die-Cast Metal Hand Washing Faucet with the following features:

- Double Infrared Sensors with Automatic Setting Feature
- Automatic Self-adapting Sensor Technology
- Solar Powered
- Magnetic Solenoid Valve
- Water Supply Connection with Flexible High-pressure Hose and Strainer
- Appropriate Mounting Hardware included
- Includes 6 VDC Lithium Battery Back-up Power Source
- 3 year limited warranty
- Brushed brass finish
- 0.5GPM sprayhead with multi-laminar flow pattern
- Battery powered with 2 CRP-2 Lithium batteries included

Electrical specifications

- Battery Life: 3 years 8,000 cycles/month
- Optional power harvesting significantly extends service life
- Sensor Range: 4”-5” (102-127 mm)
- Timeout Adjustment Setting: 30 Seconds

Warranty

View Warranty Information

Notes

All information contained within this document subject to change without notice.

*Compliant with ADA accessibility requirements when installed according to ADA standards.

Looking for other variations of the EAF-275 product? View the general spec sheet with all options.
Find a matching soap dispenser for this faucet.
Find a compatible sink for this faucet

EAF-275
Faucet with Single Line Water Supply

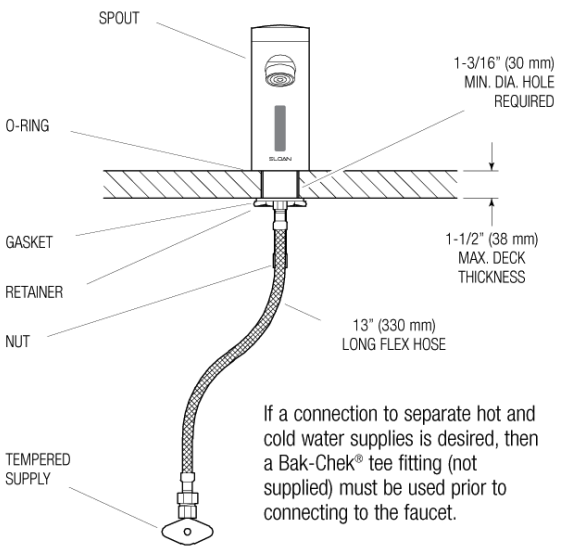

EAF-275-ISM
Faucet with Hot and Cold Water Supply

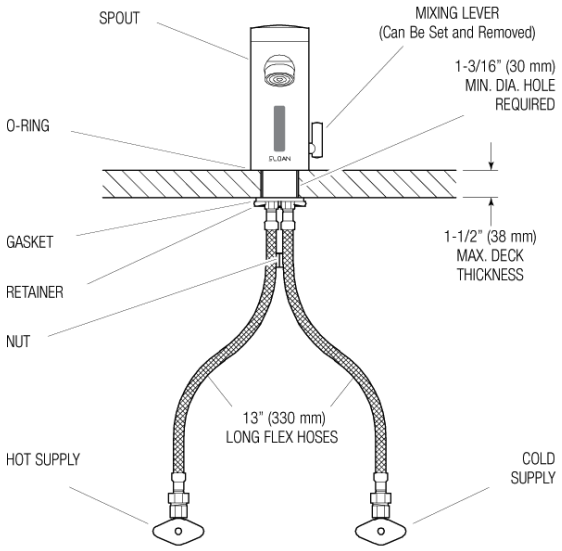

When the EAF faucet is installed on a sink that has three (3) hole punchings, a Trim Plate should be used. ***Trim Plates must be specified and ordered separately:***

ETF-312-A
Trim Plate for 4" (102 mm) Centerset Sink
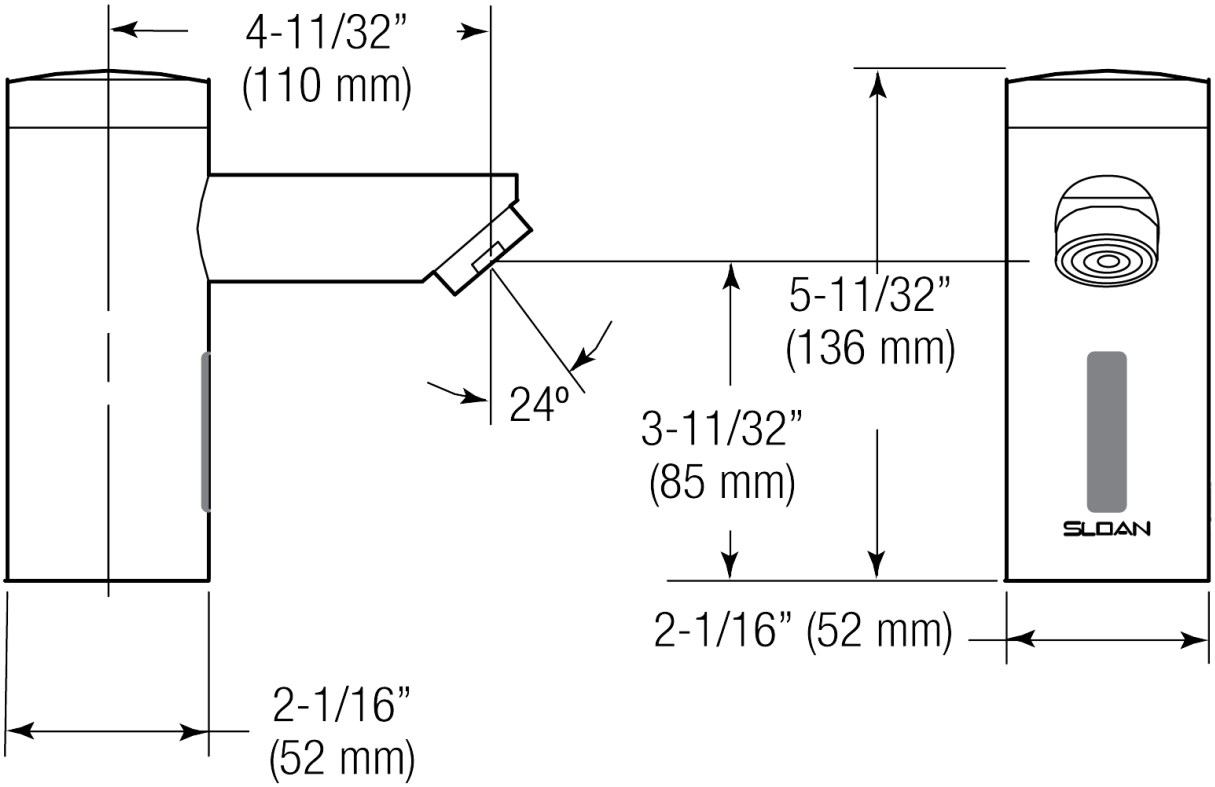
ETF-510-A
Trim Plate for 8" (203 mm) Centerset Sink