PWT™ Accessory

MCR-208

Product description

PWT System Solenoid Kit.

Compliances & Certifications

(BAA Compliant)

Code 3375016

Downloads

- Programmed Water Technologies (PWT) Brochure.pdf
- Additional Downloads

Videos

- Sloan – Company Overview

WARNING: Cancer and Reproductive Harm – www.P65Warnings.ca.gov

Sloan 10500 Seymour Ave, Franklin Park 800.982.5839 sloan.com

Features

- Electronically controls water run-times to lavatory and shower fixtures
- 160 degrees F maximum water temperature
- 24 VAC retrofit solenoid kit
- Used in conjunction with PWT control modules to provide accurate control of lavatory or shower run times
- Seven models available
- 160°F maximum water temperature
- 24 VAC – 60 Hz operating voltage
- Holding: 9 V A
- Pilot operated
- Includes 15’ cord w/6 position, 4 pin RJ-11 connection
- Current In Rush: 13 V A
- Integrated Screen Filter
- Dual O-Rings
- Knurled Locknut w/1.125” – 18 UNEF-2B thread

Warranty

View Warranty Information

Notes

All information contained within this document subject to change without notice.

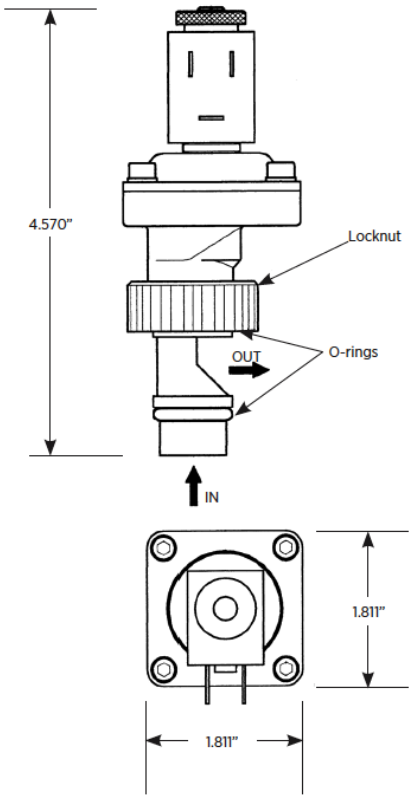
4.570"
Locknut
O-rings
OUT
IN
1.811"
1.811"