Act-O-Matic® Showerhead

AC-450-2.0GPM-CP

Product description

Polished Chrome Finish, Act-O-Matic® Institutional Showerhead.

Compliances & Certifications

(ASME A112.18.1 Compliant, BAA Compliant, BABAA Compliant, BREEAM Water Credit, CalGreen Compliant, CEC Compliant, Green Globes Water, IAPMO, IAPMO listed ASME, LEED Water, Satisfies LEED Credits, cUPC Certified, EPA WaterSense Listed)

Code 4024530

Finish

Polished Chrome (CP)

Downloads

- AC 450_460 Installation Instructions.pdf
- AC-450 (Spanish) Installation Instructions.pdf
- Showerhead Parts and Accessories Repair and Maintenance Guide.pdf
- Programmed Water Technologies (PWT) Brochure.pdf
- Additional Downloads

Videos

- Sloan – Company Overview

WARNING: Cancer and Reproductive Harm – www.P65Warnings.ca.gov

Sloan 10500 Seymour Ave, Franklin Park 800.982.5839 sloan.com

Details

- Finish: Polished Chrome (CP)
- Flow Rate: 2.0 gpm (7.6Lpm) (2.0GPM)
- Self Cleaning: Yes

Features

- Institutional Style Shower Head
- Spring-loaded, self-cleaning spray disk prevents particle clogging and reduce maintenance
- “Cone within a cone” spray pattern for total body coverage
- All brass construction
- 1/2” IPS inlet
- Fast drain feature to prevent residual slow dripping
- Shower Head shall be in conformance to all requirements of ANSI/ASME Standard A112.18.1M, CSA B-125 and the United States Federal Energy Policy Act
- Polished Chrome Finish
- Adjustable spray angle with pressure compensating 2.0 gpm (7.5 Lpm) flow control
-
- Mounting Plate with Vandal Resistant Mounting Screws
-

Recommended specifications

Sloan Act-O-Matic Institutional Showerhead model no. AC-450 2.0 gpm. Vandal Resistant and Chrome Plated.

Warranty

View Warranty Information

Notes

All information contained within this document subject to change without notice.

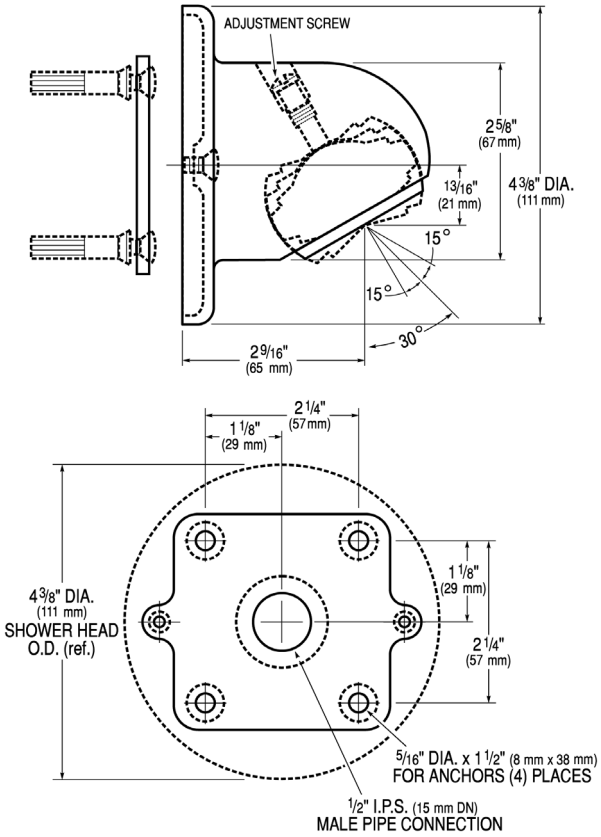
ADJUSTMENT SCREW
2 5/8" (67 mm)
4 3/8" DIA. (111 mm)
13/16" (21 mm)
15°
15°
30°
2 9/16" (65 mm)
2 1/4" (57 mm)
1 1/8" (29 mm)
4 3/8" DIA. (111 mm) SHOWER HEAD O.D. (ref.)
1 1/8" (29 mm)
2 1/4" (57 mm)
5/16" DIA. x 1 1/2" (8 mm x 38 mm) FOR ANCHORS (4) PLACES
1/2" I.P.S. (15 mm DN) MALE PIPE CONNECTION