Vitreous China Wall-Mounted Lavatory

SS-3803

Product description

Standard, Vitreous China Wall-Mounted Backsplash Lavatory.

Compliances & Certifications

(ADA Compliant*, BREEAM Materials Credit, cUPC Certified, EPD, HPD, IAPMO, LEED Credit, LEED HPD, Satisfies LEED Credits)

Code 3873803

Downloads

- Sloan SS-3003 Installation Instructions.pdf
- SS:ST:SU:WETS:WEUS Fixtures Repair and Maintenance Guide.pdf
- Sinks - Full Line Brochure.pdf
- Fixture Brochure.pdf
- Additional Downloads

Videos

- Sloan – Company Overview

WARNING: Cancer and Reproductive Harm – www.P65Warnings.ca.gov

Sloan 10500 Seymour Ave, Franklin Park 800.982.5839 sloan.com

Details

- Centerset: 8”
- Nominal Dimensions: 18.25” x 20.75” x 12.25” (464 x 527 x 311mm)
- Lavatory Type: Wall-Mounted

Features

- White, vitreous china wall hung lavatory with backsplash
- Great complement to all of Sloan’s sensor faucet series
- Self-draining deck area with back and side splash shields
- Front overflow provides clean appearance
- All mounting hardware included
- Self-draining deck area with back and side splash shields
- IAPMO certified to meet or exceed ASME A112.19.2 standards
- Meets ADA guidelines and ANSI A117.1 requirements when installed accordingly

Warranty

View Warranty Information

Notes

All information contained within this document subject to change without notice.

*Compliant with ADA accessibility requirements when installed according to ADA standards.

All vitreous china dimensions shown in these drawings are nominal and not to scale. Dimensions can vary within the tolerances established in the governing ASME A112.19.2/CSA B45.1standard. It is important to consider this when planning rough-in and plumbing layouts.

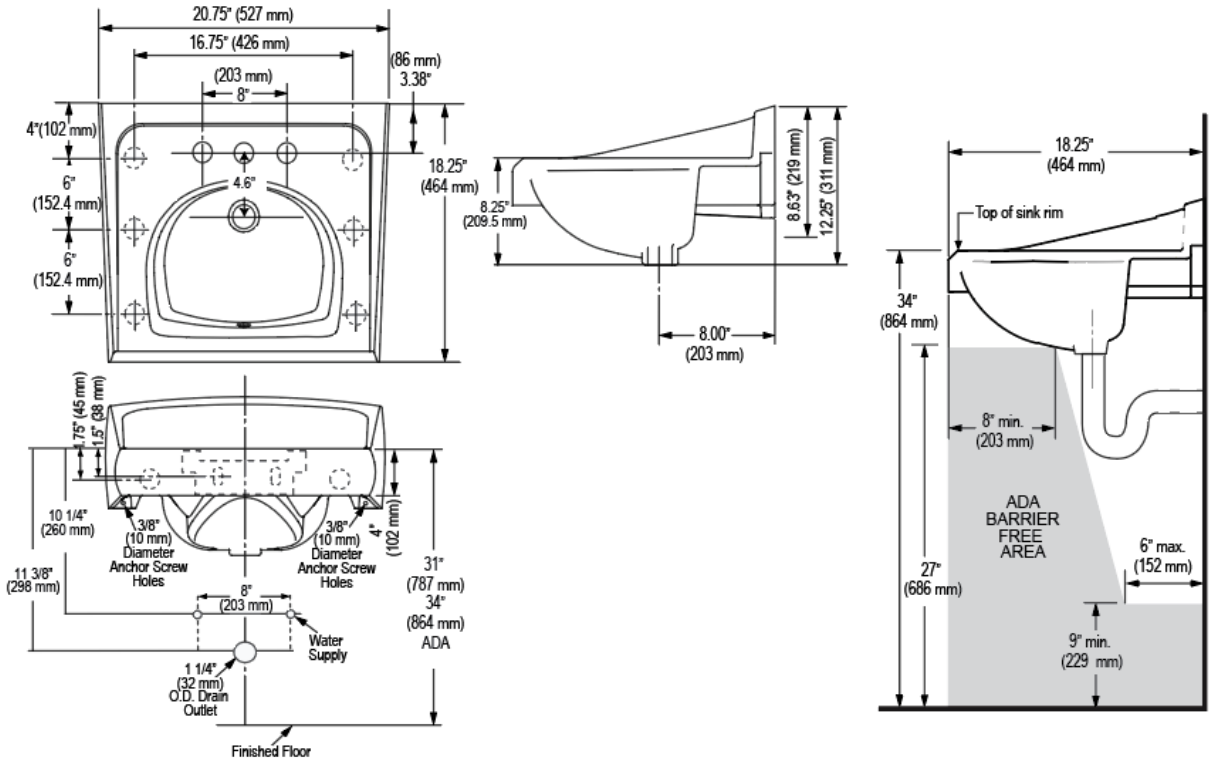
20.75" (527 mm)
16.75" (426 mm)
(203 mm)
8"
(86 mm)
3.38"
4"(102 mm)
6"
(152.4 mm)
6"
(152.4 mm)
4.6"
18.25"
(464 mm)
8.25"
(209.5 mm)
8.63" (219 mm)
12.25" (311 mm)
8.00"
(203 mm)
18.25"
(464 mm)
Top of sink rim
34"
(864 mm)
8" min.
(203 mm)
ADA
BARRIER
FREE
AREA
6" max.
(152 mm)
27"
(686 mm)
9" min.
(229 mm)
1.75" (45 mm)
1.5" (38 mm)
10 1/4"
(260 mm)
3/8"
(10 mm)
Diameter
Anchor Screw
Holes
3/8"
(10 mm)
Diameter
Anchor Screw
Holes
4"
(102 mm)
11 3/8"
(298 mm)
8"
(203 mm)
31"
(787 mm)
34"
(864 mm)
ADA
Water
Supply
1 1/4"
(32 mm)
O.D. Drain
Outlet
Finished Floor