Shown with optional SS-27-A shroud

Vitreous China Wall-Mounted Lavatory

SS-3065

Product description

Standard, Vitreous China Wall-Mounted Ledgeback Lavatory.

Compliances & Certifications

(ADA Compliant*, cUPC Certified, IAPMO)

Code 3873065

Downloads

- SS-3X65 Installation Instructions.pdf
- Vitreous China Lavatories Repair and Maintenance Guide.pdf
- Sinks - Full Line Brochure.pdf
- Fixture Brochure.pdf
- Additional Downloads

Videos

- Sloan – Company Overview

WARNING: Cancer and Reproductive Harm – www.P65Warnings.ca.gov

Sloan 10500 Seymour Ave, Franklin Park 800.982.5839 sloan.com

Details

- Centerset: 4”
- Nominal Dimensions: 20” x 21.5” x 5.75” (508 x 546 x 146mm)
- Lavatory Type: Wall-Mounted

Features

- White, vitreous china wall hung lavatory with rear overflow
- Great complement to all of Sloan’s sensor faucet series
- IAPMO certified to meet or exceed ASME A112.19.2 standards
- Meets ADA guidelines and ANSI A117.1 requirements when installed accordingly

Warranty

View Warranty Information

Notes

All information contained within this document subject to change without notice.

*Compliant with ADA accessibility requirements when installed according to ADA standards.

All vitreous china dimensions shown in these drawings are nominal and not to scale. Dimensions can vary within the tolerances established in the governing ASME A112.19.2/CSA B45.1standard. It is important to consider this when planning rough-in and plumbing layouts.

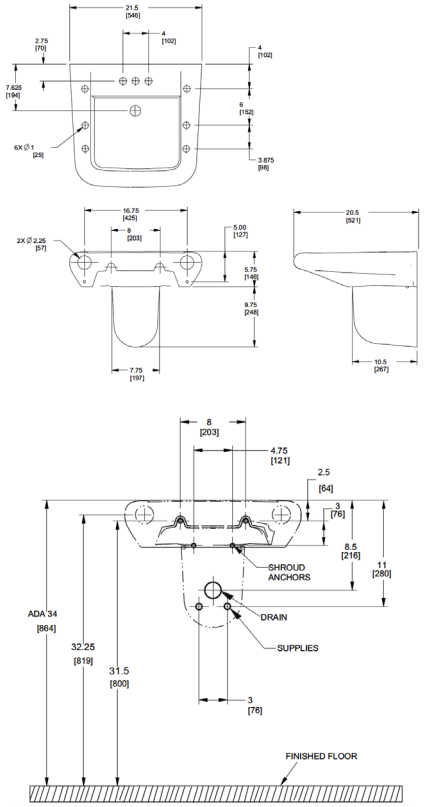

Sloan 10500 Seymour Ave, Franklin Park 800.982.5839 sloan.com