PWT™ Accessory

MCR-4014-A

Product description

PWT System 4-I/O Controller.

Compliances & Certifications

(BAA Compliant)

Code 3375084

Downloads

- MCR-4004_4014_8002_8012.pdf
- Programmed Water Technologies (PWT) Brochure.pdf
- Additional Downloads

Videos

- Sloan – Company Overview

WARNING: Cancer and Reproductive Harm – www.P65Warnings.ca.gov

Sloan 10500 Seymour Ave, Franklin Park 800.982.5839 sloan.com

Features

- IP53 rated enclosure w/ hinged door
- Four Input/output field-programmable controller to control lavatories, water closets, showers or combination fixtures
- Fixture usage can be pre-programmed for delays, scheduled runtimes or complete lockouts to prohibit improper usage of water closets, lavatories and showers
- Input and output diagnostic LEDs give immediate information about service issues
- Easy access reset button
- different controllers offer oversight of various combinations of fixtures
- Administrators can change settings in the field

Warranty

View Warranty Information

Notes

All information contained within this document subject to change without notice.

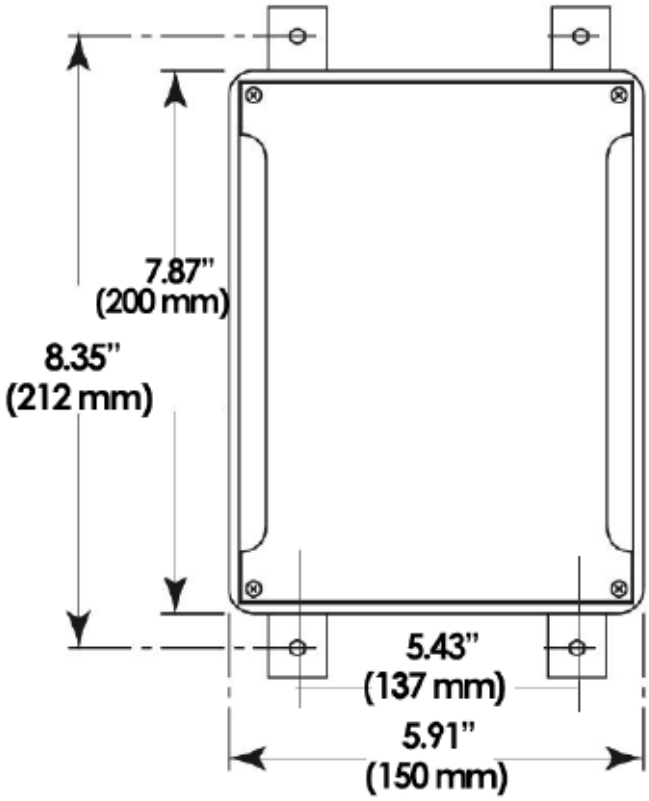
7.87"
(200 mm)
8.35"
(212 mm)
5.43"
(137 mm)
5.91"
(150 mm)