Variation Not Shown: Metal Index Push Button

Royal® Manual Flushometer

ROYAL 190-3.5-RB-WB-9-3/4-LDIM-L

Product description

3.5 gpf, Rough Brass Finish, Fixture Connection Rear Spud, Single Flush, 9.75” L Dimension, Metal Index Push Button, Standard size (WB-1-A wall box not included- order separately) Wall Box, Royal® Concealed Manual Urinal Flushometer.

Compliances & Certifications

(BAA Compliant, IAPMO, Made in the USA, UPC Certified)

Code 3013091

Finish

Rough Brass (RB)

Downloads

- Sloan Concealed Installation Instructions.pdf
- Control Stop Repair and Maintenance Guide.pdf
- Flush Connections Flanges Repair and Maintenance Guide.pdf
- Additional Downloads

Videos

- Sloan – Company Overview

WARNING: Cancer and Reproductive Harm – www.P65Warnings.ca.gov

Sloan 10500 Seymour Ave, Franklin Park 800.982.5839 sloan.com

Details

- Flush Volume: 3.5 gpf (13.2 lpf)
- Finish: Rough Brass (RB)
- Valve: Diaphragm
- Valve Body Material: Semi-red Brass
- Fixture Type: Urinal
- Fixture Connection: Rear Spud
- Rough-in Dimension: 14.5" (368mm)
- Spud Coupling: 1.25" (32mm)
- Supply Pipe: 1" (25mm)
- L Dimension: 9.75" (248mm) (9-3/4-LDIM)
- Wall Box: Standard size (WB-1-A wall box not included- order separately) (undefined)
- Push Button: Metal Index (L)

Features

- Flush volumes start as low as a pint of water
- Water conservation is aided by the ADA-compliant, non-hold-open handle, which prevents urinal from exceeding intended flush volume
- Flush accuracy is controlled by CID™ technology, also enhancing water efficiency
- Durability is facilitated with high copper, low zinc brass castings for dezincification resistance
- Adjustable tailpiece
- PERMEX® Synthetic Rubber Diaphragm with Dual Filtered Fixed Bypass
- Valve body, Cover, Tailpiece and Control Stop shall be in compliance with ASTM Alloy Classification for Semi-Red Brass
- Valve shall be in compliance to the applicable sections of ASSE 1037

Recommended specifications

Valve Body, Cover, Tailpiece and Control Stop shall be in conformance with ASTM Alloy Classification for Semi-Red Brass. Valve shall be in compliance with the applicable sections of ASSE 1037 and ANSI/ASME 112.19.2.

Valve Operating Pressure (Flowing)

15-80 psi (103 - 552 kPa). Specific fixtures may require greater minimum flowing pressure - consult manufacturer requirements.

Warranty

View Warranty Information

Notes

All information contained within this document subject to change without notice.

Looking for other variations of the ROYAL 190 product? View the general spec sheet with all options.
Find a compatible urinal for this flushometer.
Find a compatible water closet for this flushometer.

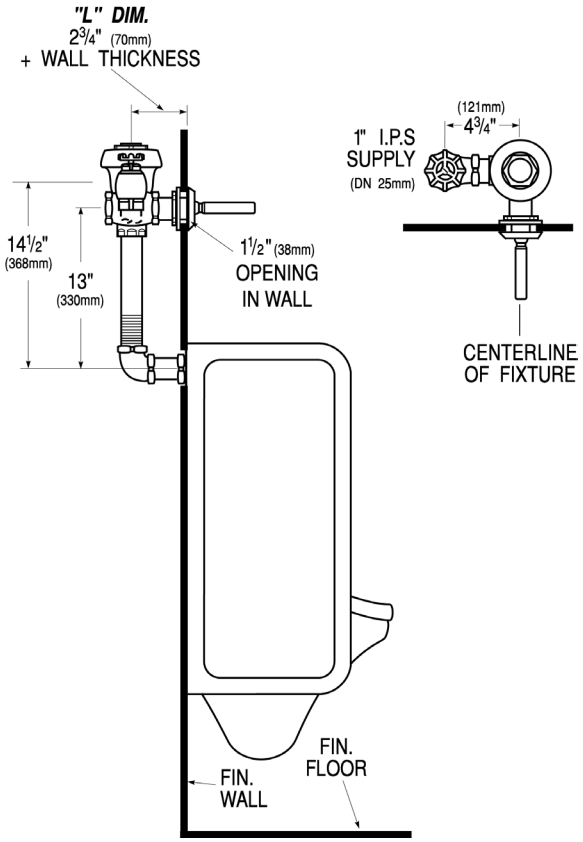
"L" DIM.
2 3/4" (70mm)
+ WALL THICKNESS
14 1/2"
(368mm)
13"
(330mm)
1 1/2" (38mm)
OPENING
IN WALL
1" I.P.S
SUPPLY
(DN 25mm)
(121mm)
4 3/4"
CENTERLINE
OF FIXTURE
FIN.
FLOOR
FIN.
WALL