Urinal & Flushometer Combo

WEUS-1006.1301-1.0-CP-L/OR-HW-24V

Product description

1.0 gpf, Polished Chrome Finish, Fixture Connection Top Spud, Single Flush, 3/4” Control Stop, Less Override, Hardwired, Sensor-Operated, 24V, SU-1009 Urinal and ROYAL 186 ESS Flushometer.

Compliances & Certifications

(ADA Compliant*, BAA Compliant, BABAA Compliant, EPD, HPD, IAPMO, cUPC Certified, WELL Building Standard)

Code 10061301

Downloads

- Standard Spud Urinal Installation Instructions.pdf
- Royal ESS Concealed and Exposed Installation Instructions.pdf
- SS:ST:SU:WETS:WEUS Fixtures Repair and Maintenance Guide.pdf
- Fixture Brochure.pdf
- Additional Downloads

Videos

- Sloan – Company Overview

WARNING: Cancer and Reproductive Harm – www.P65Warnings.ca.gov

Sloan 10500 Seymour Ave, Franklin Park 800.982.5839 sloan.com

Details

- Flush Volume: 1.0 gpf (3.8 lpf)

Features

- Complete urinal system including Royal flushometer Designed to maximize performance
- Thorough washdown flushing action
- Durable, hygienic vitreous china construction
- Vandal resistant stainless steel strainer included
- IAPMO certified to meet or exceed ASME A112.19.2 standards
- Meets ADA guidelines and ANSI A117.1 requirements when installed accordingly

Components

- Flushometer: Code 3452673
- Urinal: Code 1101009

Warranty

View Warranty Information

Notes

All information contained within this document subject to change without notice.

*Compliant with ADA accessibility requirements when installed according to ADA standards.

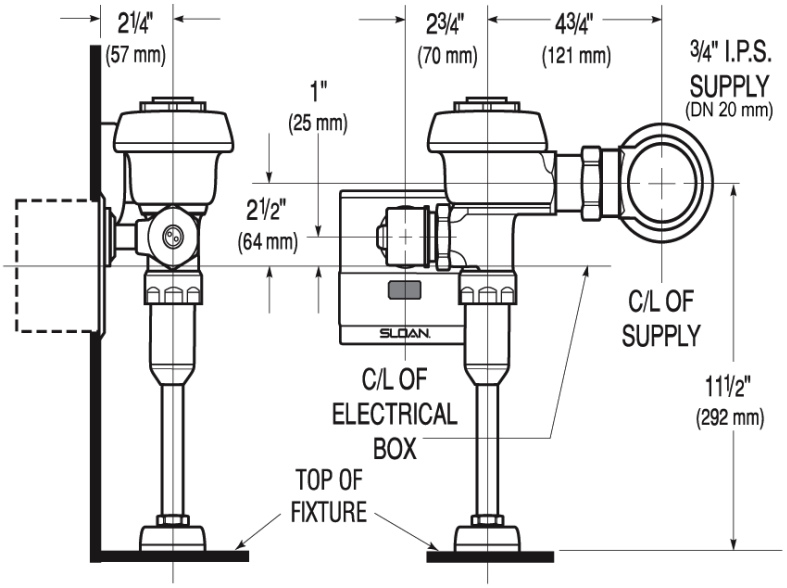
2¼"
(57 mm)
2¾"
(70 mm)
4¾"
(121 mm)
¾" I.P.S.
SUPPLY
(DN 20 mm)
1"
(25 mm)
2½"
(64 mm)
SLOAN
C/L OF
SUPPLY
C/L OF
ELECTRICAL
BOX
11½"
(292 mm)
TOP OF
FIXTURE

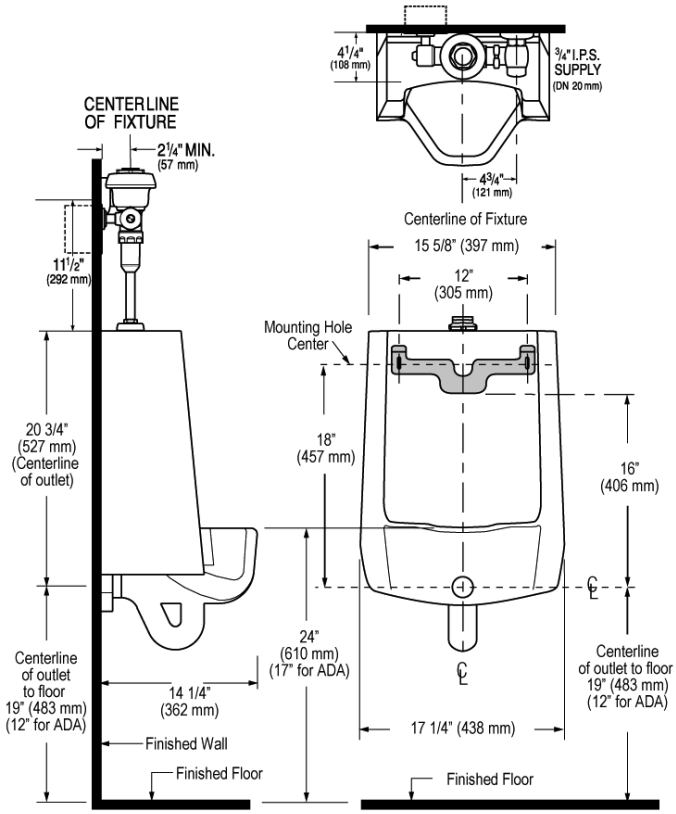
4¼"
(108 mm)
¾" I.P.S.
SUPPLY
(DN 20 mm)
4¾"
(121 mm)
CENTERLINE
OF FIXTURE
2¼" MIN.
(57 mm)
11½"
(292 mm)
Centerline of Fixture
15 5/8" (397 mm)
12"
(305 mm)
Mounting Hole
Center
20 3/4"
(527 mm)
(Centerline
of outlet)
18"
(457 mm)
16"
(406 mm)
24"
(610 mm)
(17" for ADA)
Centerline
of outlet
to floor
19" (483 mm)
(12" for ADA)
14 1/4"
(362 mm)
17 1/4" (438 mm)
Centerline
of outlet to floor
19" (483 mm)
(12" for ADA)
Finished Wall
Finished Floor
Finished Floor