Water Closet & Flushometer Combo

WETS-2001.1411-1.1-CP-HW

Product description

1.1 gpf, Dual-Filtered Bypass, Polished Chrome Finish, 1.5” Flush Connection, Fixture Connection Top Spud, Single Flush, 1” Inlet, 1” Control Stop, Electrical Override, Hardwired, Infrared, ST-2009 Water Closet and ECOS 111 Flushometer.

Compliances & Certifications

(ADA Compliant*, CalGreen Compliant, CEC Compliant, EPD, HPD, IAPMO, Satisfies LEED Credits, cUPC Certified, EPA WaterSense Listed, WELL Building Standard)

Code 20011411

Downloads

- WES 111 Installation Instructions.pdf
- HET Top Spud Installation Instructions.pdf
- SS:ST:SU:WETS:WEUS Fixtures Repair and Maintenance Guide.pdf
- ECOS HW Repair and Maintenance Guide.pdf
- Additional Downloads

Videos

- Sloan – Company Overview

WARNING: Cancer and Reproductive Harm – www.P65Warnings.ca.gov

Sloan 10500 Seymour Ave, Franklin Park 800.982.5839 sloan.com

Details

- Flush Volume: 1.1 gpf (4.2 lpf)

Features

- Automatically initiates a 1.1 gpf or 1.6 gpf flush based on how long the user remains in sensor range
- Buttons on top of the flush valve enable manual flushing with a full or reduced flush at restroom visitor's discretion
- Employs an infrared sensor with multiple-focused, lobular sensing fields for high and low target detection
- User-friendly, three-second flush delay
- High copper, low zinc brass castings for dezincification resistance
- Fixed metering bypass and no external volume adjustment to ensure water conservation
- Valve body, Cover, Tailpiece and Control Stop shall be in compliance with ASTM Alloy Classification for Semi-Red Brass
- Valve shall be in compliance to the applicable sections of ASSE 1037
- Designed to maximize and complement Sloan flushometers
- Universal model works with Sloan flushometers from 1.1 to 1.6 gpf
- Durable, hygienic vitreous china construction with elongated rim
- Syphon jet flushing achieves 1000g Map Scores when used with Sloan flushometers
- IAPMO certified to meet or exceed ASME A112.19.2 standards
- WaterSense compliant when used with a WaterSense compliant flushometer

Components

- Flushometer: Code 3370475
- Water Closet: Code 2102009

Warranty

View Warranty Information

Notes

All information contained within this document subject to change without notice.

*Compliant with ADA accessibility requirements when installed according to ADA standards.

Static load tested according to the procedure outlined in Section 6.7 of ASME A112.19.2. Not recommended for bariatric use.

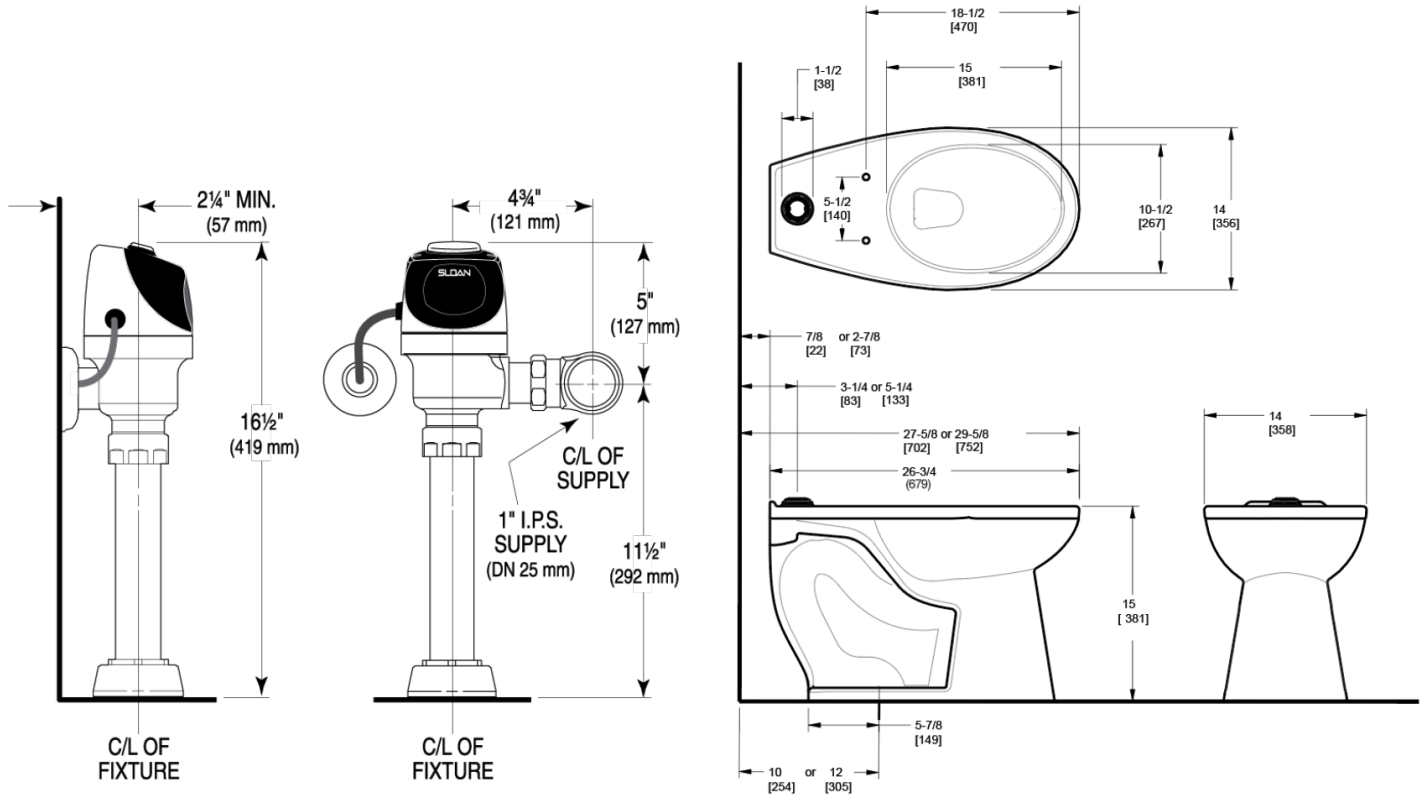
2¼" MIN.
(57 mm)
16½"
(419 mm)
C/L OF
FIXTURE
4¾"
(121 mm)
5"
(127 mm)
C/L OF
SUPPLY
1" I.P.S.
SUPPLY
(DN 25 mm)
11½"
(292 mm)
C/L OF
FIXTURE
18-1/2
[470]
1-1/2
[38]
15
[381]
5-1/2
[140]
10-1/2
[267]
14
[356]
7/8 or 2-7/8
[22] [73]
3-1/4 or 5-1/4
[83] [133]
27-5/8 or 29-5/8
[702] [752]
26-3/4
(679)
14
[358]
15
[381]
5-7/8
[149]
10 or 12
[254] [305]