Sloan® Sensor Flushometer

SLOAN 110 ESS-3.5-CP-TMO-HW-24V

Product description

3.5 gpf, Dual-Filtered Fixed Bypass Diaphragm, Polished Chrome Finish, Fixture Connection Top Spud, Single Flush, True Mechanical Override, Hardwired, Sensor-Operated, 24V, Sloan® Exposed Sensor Hardwired Water Closet Flushometer.

Compliances & Certifications

(ADA Compliant*, BAA Compliant, BABAA Compliant, IAPMO, UL Certified (US), cUPC Certified)

Code 3770120

Finish

Polished Chrome (CP)

Downloads

- Sloan_Regal Concealed and Exposed Sensor Installation Instructions.pdf
- Optima ESS Repair and Maintenance Guide.pdf
- Control Stop Repair and Maintenance Guide.pdf
- Additional Downloads

Videos

- ESS Flushometer

WARNING: Cancer and Reproductive Harm – www.P65Warnings.ca.gov

Sloan 10500 Seymour Ave, Franklin Park 800.982.5839 sloan.com

Details

- Flush Volume: 3.5 gpf (13.2 lpf)
- Finish: Polished Chrome (CP)
- Power Type: Hardwired (HW)
- Valve: Diaphragm
- Bypass: Dual-Filtered Fixed Bypass Diaphragm
- Valve Body Material: Semi-red Brass
- Fixture Type: Water Closet
- Fixture Connection: Top Spud
- Rough-in Dimension: 11.5” (292mm)
- Spud Coupling: 1.5” (38mm)
- Supply Pipe: 1” (25mm)
- Override: True Mechanical (TMO)
- Voltage: 24V (24V)

Features

- Flush volumes as low as 3.5 gpf/13.2 Lpf
- Water conservation is aided by the ADA-compliant, non-hold-open handle, which prevents toilet from exceeding intended flush volume
- Flush accuracy is controlled by CID™ technology, also enhancing water efficiency
- Integrity of the product is maintained with the vandal-resistant stop cap
- Durability is facilitated with high copper, low zinc brass castings for dezincification resistance
- Adjustable tailpiece to accommodate different height requirements
- High chloramine resistant PERMEX® Synthetic Rubber Diaphragm with Linear Filtered Bypass and Vortex Cleansing Action
- Valve body, Cover, Tailpiece and Control Stop shall be in compliance with ASTM Alloy Classification for Semi-Red Brass
- Valve shall be in compliance to the applicable sections of ASSE 1037

Recommended specifications

Valve Body, Cover, Tailpiece and Control Stop shall be in conformance with ASTM Alloy Classification for Semi-Red Brass. Valve shall be in compliance with the applicable sections of ASSE 1037 and ANSI/ASME 112.19.2.

Electrical specifications

- Arming Delay: 16 seconds
- Control Circuit:
  - 24 VAC Input
  - 24 VAC Output
  - Solid State
- Flush Delay: 3 seconds
- Sensor Range: 22”-42” (559 - 1067mm)
- Self-Adaptive Window: ±10”
- Solenoid Operator: 24 VAC
- Transformers (Specify Separately):
  - EL-154/0345154
  - EL-342/0345999

Valve Operating Pressure (Flowing)

15-80 psi (103 - 552 kPa). Specific fixtures may require greater minimum flowing pressure - consult manufacturer requirements.

Warranty

View Warranty Information

Notes

All information contained within this document subject to change without notice.

*Compliant with ADA accessibility requirements when installed according to ADA standards.

Looking for other variations of the SLOAN 110 ESS product? View the general spec sheet with all options.
Find a compatible urinal for this flushometer.
Find a compatible water closet for this flushometer.

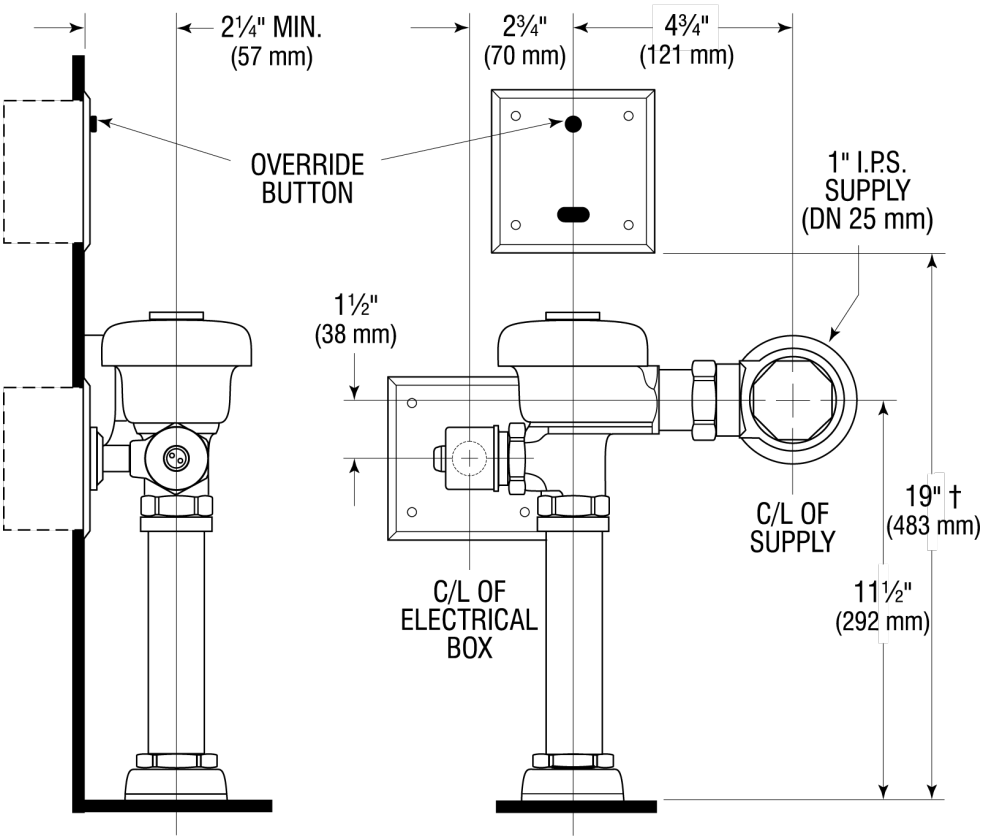
2¼" MIN.
(57 mm)
2¾"
(70 mm)
4¾"
(121 mm)
OVERRIDE
BUTTON
1" I.P.S.
SUPPLY
(DN 25 mm)
1½"
(38 mm)
C/L OF
SUPPLY
19" †
(483 mm)
11½"
(292 mm)
C/L OF
ELECTRICAL
BOX