

Variation shown: Hydraulic button (not included)

Urinal & Flushometer Combo

WEUS-1012.1011-0.25-RB

Product description

0.25 gpf, Rough Brass Finish, Fixture Connection Rear Spud, Single Flush, 2”-10.75” L Dimension, SU-1012 Urinal and ROYAL 995 Flushometer.

Compliances & Certifications

(ADA Compliant*, BAA Compliant, BREEAM Water Credit, cUPC Green Certified, EPD, Green Globes Water, HPD, IAPMO, LEED Water, Satisfies LEED Credits, EPA WaterSense Listed, WELL Building Standard)

Code 10121011

Downloads

- Standard Spud Urinal Installation Instructions
- Royal_Regal Series 900 Hydraulic Installation Instructions
- SS:ST:SU:WETS:WEUS Fixtures Repair and Maintenance Guide
- Hydraulic Push Button Options
- Fixture Brochure
- Additional Downloads

Videos

- Sloan – Company Overview

⚠ WARNING: Cancer and Reproductive Harm – www.P65Warnings.ca.gov

Sloan 10500 Seymour Ave, Franklin Park 800.982.5839 sloan.com

Details

- Flush Volume: 0.25 gpf (0.9 lpf)

Features

- Complete urinal system including Royal flushometer Designed to maximize performance
- Thorough washdown flushing action
- Durable, hygienic vitreous china construction
- Vandal resistant stainless steel strainer included
- IAPMO certified to meet or exceed ASME A112.19.2 standards
- Water Sense listed by EPA that qualifies for most rebate programs
- Meets ADA guidelines and ANSI A117.1 requirements when installed accordingly

Components

- Flushometer: Code 3915520
- Urinal: Code

Warranty

View Warranty Information

Notes

All information contained within this document subject to change without notice.

*Compliant with ADA accessibility requirements when installed according to ADA standards.

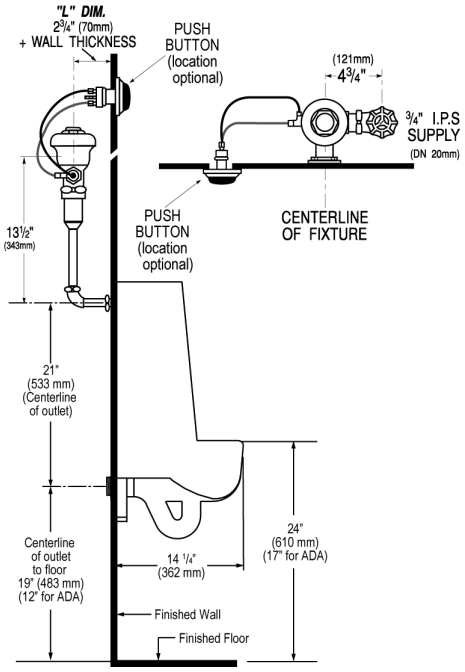
"L" DIM.
2¾" (70mm)
+ WALL THICKNESS
PUSH
BUTTON
(location
optional)
(121mm)
4¾"
¾" I.P.S
SUPPLY
(DN 20mm)
PUSH
BUTTON
(location
optional)
CENTERLINE
OF FIXTURE
13½"
(343mm)
21"
(533 mm)
(Centerline
of outlet)
Centerline
of outlet
to floor
19" (483 mm)
(12" for ADA)
14 ¼"
(362 mm)
24"
(610 mm)
(17" for ADA)
Finished Wall
Finished Floor

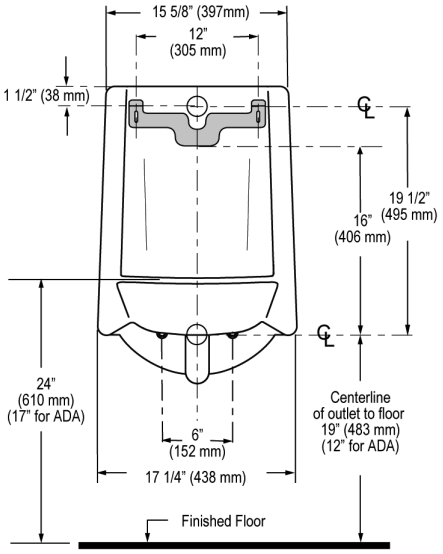
15 5/8" (397mm)
12"
(305 mm)
1 1/2" (38 mm)
19 1/2"
(495 mm)
16"
(406 mm)
24"
(610 mm)
(17" for ADA)
Centerline
of outlet to floor
19" (483 mm)
(12" for ADA)
6"
(152 mm)
17 1/4" (438 mm)
Finished Floor