Variations Not Shown: 1" Offset and F188 Outlet Tube

Sloan® Manual Specialty Flushometer

SLOAN BPW 1150-1.28-CP

Product description

1.28 gpf, Dual-Filtered Fixed Bypass Diaphragm, Polished Chrome Finish, Fixture Connection Top Spud, Single Flush, Sloan® Exposed Manual Specialty Water Closet Bedpan Washer Flushometer.

Compliances & Certifications

(ADA Compliant*, BAA Compliant, BREEAM Water Credit, cUPC Green Certified, Green Globes Water, IAPMO, LEED Water, Satisfies LEED Credits, EPA WaterSense Listed)

Code 3789660

Finish

Polished Chrome (CP)

Downloads

- BPW Exposed Installation Instructions.pdf
- Control Stop Repair and Maintenance Guide.pdf
- Flush Connections Flanges Repair and Maintenance Guide.pdf
- Additional Downloads

Videos

- Sloan – Company Overview

WARNING: Cancer and Reproductive Harm – www.P65Warnings.ca.gov

Sloan 10500 Seymour Ave, Franklin Park 800.982.5839 sloan.com

Details

- Flush Volume: 1.28 gpf (4.8 lpf)
- Finish: Polished Chrome (CP)
- Valve: Diaphragm
- Bypass: Dual-Filtered Fixed Bypass Diaphragm
- Valve Body Material: Semi-red Brass
- Fixture Type: Water Closet
- Fixture Connection: Top Spud
- Rough-in Dimension: 26.5" (673mm)
- Spud Coupling: 1.5" (38mm)
- Supply Pipe: 1" (25mm)

Features

- Exposed water closet, diaphragm type, chrome-plated Flushometer for floor-mounted or wall-hung top spud bowls and for installation where clearance is required around grab bars
- Meets ADA height requirements
- Automatically operates by means of a self-adaptive infrared sensor
- Presents a leaner, more aesthetic installation, reducing possible bacteria growth on hidden and hard-to-reach surfaces found on other bedpan washer units
- Eliminates the need for unsanitary hose sprays, as well as the additional housekeeping that hoses require and the potential for patient slippage
- Incorporates a patented one-piece construction body design, maintaining the spray arm in an upright position
- Valve body, stop body, diverter body and diverter pivot made from brass casting using semi-red brass for durability and long life
- High chloramine resistant PERMEX® Synthetic Rubber Diaphragm with Linear Filtered Bypass and Vortex Cleansing Action
- Valve body, Cover, Tailpiece and Control Stop shall be in compliance with ASTM Alloy Classification for Semi-Red Brass
- Valve shall be in compliance to the applicable sections of ASSE 1037

Recommended specifications

Valve Body, Cover, Tailpiece and Control Stop shall be in conformance with ASTM Alloy Classification for Semi-Red Brass. Valve shall be in compliance with the applicable sections of ASSE 1037 and ANSI/ASME 112.19.2.

Valve Operating Pressure (Flowing)

15-80 psi (103 - 552 kPa). Specific fixtures may require greater minimum flowing pressure - consult manufacturer requirements.

Warranty

View Warranty Information

Notes

All information contained within this document subject to change without notice.

*Compliant with ADA accessibility requirements when installed according to ADA standards.
WaterSense compliant when used with a 1.28 gpf (4.8 lpf) WaterSense fixture.

Looking for other variations of the SLOAN BPW 1150 product?
View the general spec sheet with all options.
Find a compatible urinal for this flushometer.
Find a compatible water closet for this flushometer.

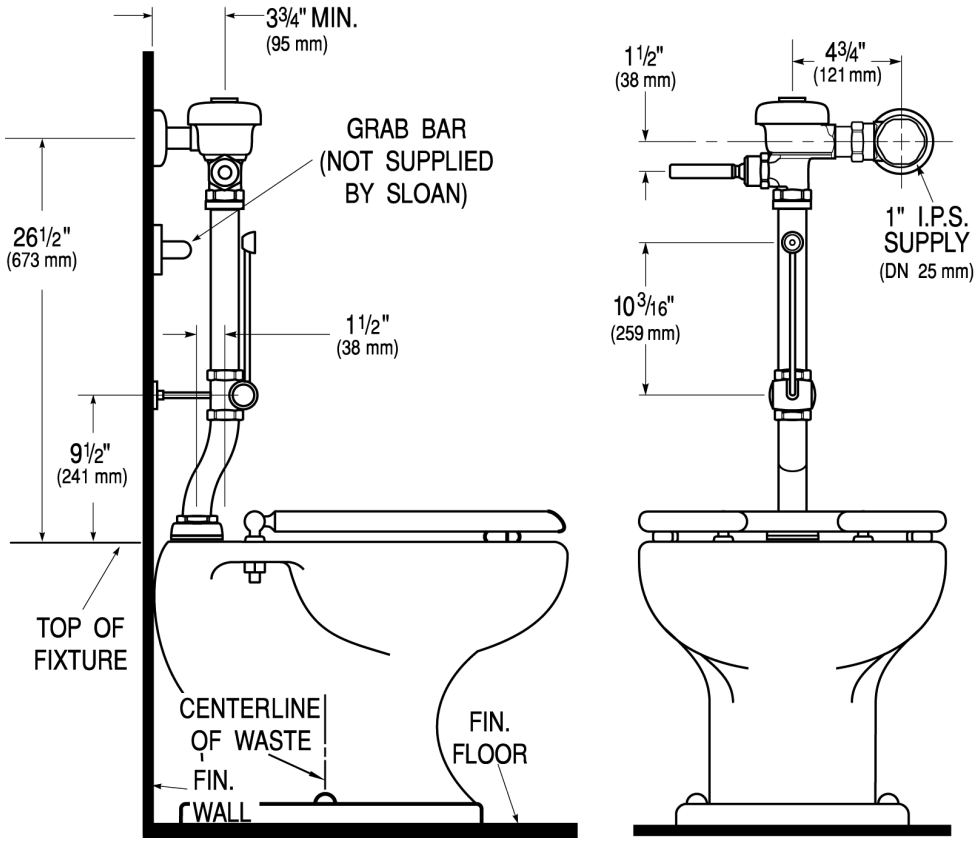
3¾" MIN.
(95 mm)
GRAB BAR
(NOT SUPPLIED
BY SLOAN)
26½"
(673 mm)
1½"
(38 mm)
9½"
(241 mm)
TOP OF
FIXTURE
CENTERLINE
OF WASTE
FIN.
WALL
FIN.
FLOOR
1½"
(38 mm)
4¾"
(121 mm)
1" I.P.S.
SUPPLY
(DN 25 mm)
10 3/16"
(259 mm)