

Royal® Sensor Flushometer

ROYAL 111 SFSM-1.28-CP-TMO

Product description

1.28 gpf, Polished Chrome Finish, 1.5” Flush Connection, Fixture Connection Top Spud, Single Flush, 1” Inlet, 1” Control Stop, True Mechanical Override, Battery, Infrared, Royal® Exposed Sensor Water Closet Flushometer.

Compliances & Certifications

(ADA Compliant*, BAA Compliant, BABAA Compliant, BREEAM Water Credit, Green Globes Water, IAPMO, LEED Water, Satisfies LEED Credits, EPA WaterSense Listed)

Code 3910276

Finish

Polished Chrome (CP)

Downloads

- Royal Exposed Installation Instructions
- Royal Exposed Spanish Installation Instructions
- EBV-500_550-A Installation Instructions
- Control Stop Repair and Maintenance Guide
- Flush Connections Flanges Repair and Maintenance Guide
- Flushometers Brochure
- Additional Downloads

Videos

- Sloan – Company Overview

⚠ WARNING: Cancer and Reproductive Harm – www.P65Warnings.ca.gov

Sloan 10500 Seymour Ave, Franklin Park 800.982.5839 sloan.com

Details

- Flush Volume: 1.28 gpf (4.8 lpf)
- Finish: Polished Chrome (CP)
- Power Type: Battery
- Valve: Diaphragm
- Valve Body Material: Semi-red Brass
- Fixture Type: Water Closet
- Fixture Connection: Top Spud
- Rough-in Dimension: 11.5" (292mm)
- Spud Coupling: 1.5" (38mm)
- Supply Pipe: 1" (25mm)
- Override: True Mechanical (TMO)
- Control Stop: 1"
- Flush Connection: 1.5" (38mm)

Features

- All organic rubber has been replaced with synthetic compounds
- Critical components, including cover, valve body, control stop and sweat solder kit, are made of semi-red brass
- PERMEX® Synthetic Rubber Diaphragm with Dual Filtered Fixed Bypass
- Valve body, Cover, Tailpiece and Control Stop shall be in compliance with ASTM Alloy Classification for Semi-Red Brass
- Valve shall be in compliance to the applicable sections of ASSE 1037

Recommended specifications

Valve Body, Cover, Tailpiece and Control Stop shall be in conformance with ASTM Alloy Classification for Semi-Red Brass. Valve shall be in compliance with the applicable sections of ASSE 1037 and ANSI/ASME 112.19.2.

Electrical specifications

- Flush Delay: 3 seconds
- Sensor Range: 22"-42" (559 - 1067mm)

Valve Operating Pressure (Flowing)

15-80 psi (103 - 552 kPa). Specific fixtures may require greater minimum flowing pressure - consult manufacturer requirements.

Warranty

View Warranty Information

Notes

All information contained within this document subject to change without notice.

*Compliant with ADA accessibility requirements when installed according to ADA standards.
WaterSense compliant when used with a 1.28 gpf (4.8 lpf) WaterSense fixture.

Looking for other variations of the ROYAL 111 SFSM product?
View the general spec sheet with all options.
Find a compatible urinal for this flushometer.
Find a compatible water closet for this flushometer.

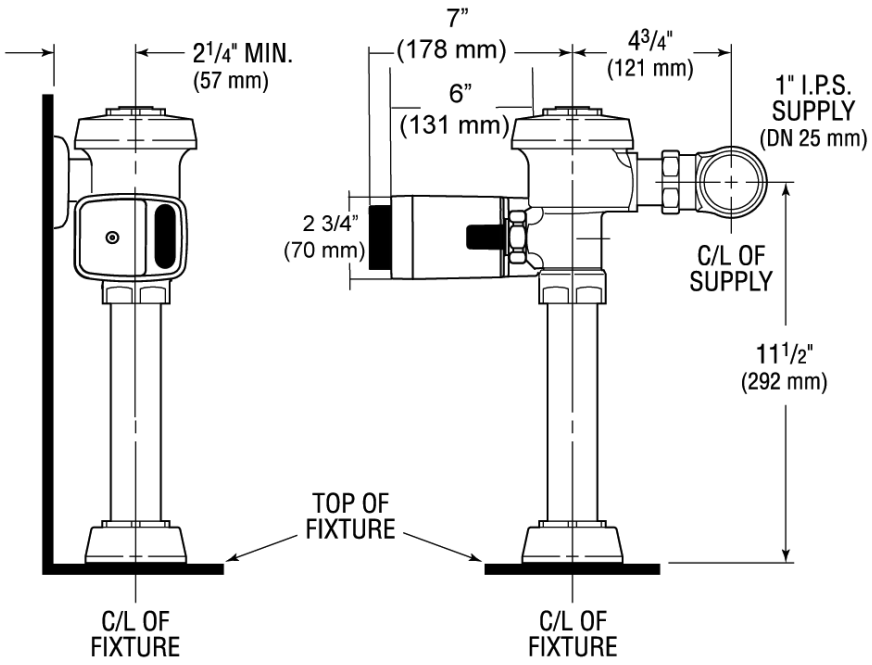
2¼" MIN.
(57 mm)
7"
(178 mm)
6"
(131 mm)
4¾"
(121 mm)
1" I.P.S.
SUPPLY
(DN 25 mm)
2 3/4"
(70 mm)
C/L OF
SUPPLY
11½"
(292 mm)
TOP OF
FIXTURE
C/L OF
FIXTURE
C/L OF
FIXTURE

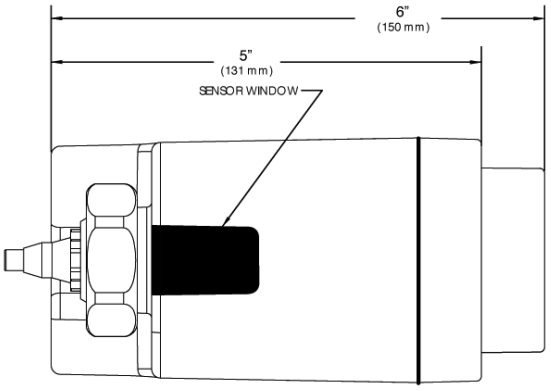
6"
(150 mm)
5"
(131 mm)
SENSOR WINDOW