Standard Washdown Urinal

SU-1019-STG

Product description

SloanTec® Glaze, Vitreous China Washdown Urinal.

Compliances & Certifications

(ADA Compliant*, BAA Compliant, BREEAM Materials Credit, cUPC Green Certified, EPD, Green Globes Credit, HPD, IAPMO, LEED Credit, LEED HPD, Satisfies LEED Credits, EPA WaterSense Listed)

Code 1171019

Downloads

- Standard Spud Urinal Installation Instructions.pdf
- SS:ST:SU:WETS:WEUS Fixtures Repair and Maintenance Guide.pdf
- Fixture Brochure.pdf
- Additional Downloads

Videos

- Sloan – Company Overview

WARNING: Cancer and Reproductive Harm – www.P65Warnings.ca.gov

Sloan 10500 Seymour Ave, Franklin Park 800.982.5839 sloan.com

Details

- Flush Volume: 0.125-1.0 gpf (0.5-3.8 lpf)
- Flush Volume determined by the Flushometer used with the Fixture
- Nominal Dimensions: 14.25” x 17.25” x 25.5” (362 x 438 x 648mm)
- Flush Method: Washdown

Features

- Designed to maximize and complement Sloan flushometers
- Universal high-efficiency model works with 0.125, 0.25 and 0.5 gpf Sloan flushometers
- Thorough washdown flushing action
- Durable, hygienic vitreous china construction
- Vandal resistant stainless steel strainer included
- IAPMO certified to meet or exceed ASME A112.19.2 standards
- Water Sense listed by EPA that qualifies for most rebate programs
- Permanent SloanTec® hydrophobic antimicrobial glaze inhibits the growth and buildup of germs, bacteria, mold, mildew and mineral scale on the surfaces

Plumbing System Requirements

- Maximum Static Pressure: 80 PSI (552 kPa)
- Maximum Flow Rate: 8.5 gpm (32.2 Lpm)

Warranty

View Warranty Information

Notes

All information contained within this document subject to change without notice.

*Compliant with ADA accessibility requirements when installed according to ADA standards.

All vitreous china dimensions shown in these drawings are nominal and not to scale. Dimensions can vary within the tolerances established in the governing ASME A112.19.2/CSA B45.1 standard. It is important to consider this when planning rough-in and plumbing layouts.

WaterSense compliant when used with a WaterSense compliant flushometer.
Find a compatible flushometer for this urinal.
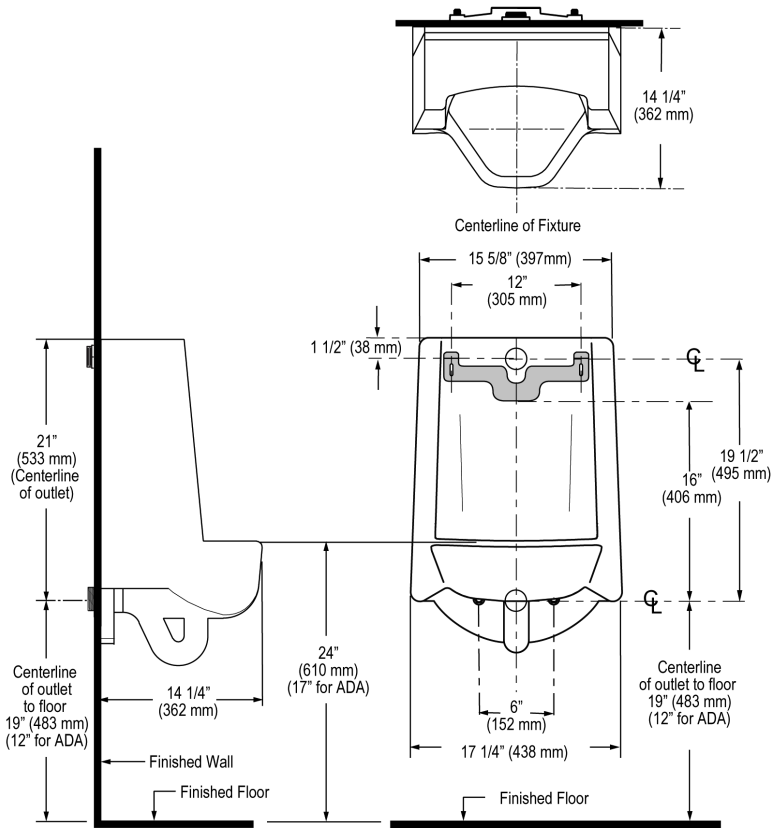
Rough-in and line drawing