DropSpot™ Bottle Filler & Water Cooler

DRS110

Product description

, DropSpot™ On-wall Bottle Filler with Single-level Cooler.

Compliances & Certifications

ASME, cULus LISTED, cUPC, FC, filter first, IAPMO MEMBER, NSF-42, NSF/ANSI/CAN 61 cUPC, NSF-372, NSF-401, cULus LISTED

(ASME A112.18.1 Compliant, FCC Compliant, IAPMO, IAPMO Water, IAPMO listed ASME, IGC 115, IGC 226, MA Approved, Meets Canada OBC and QBC, Michigan Filter First, Filter listed to (NSF-42, NSF-53, NSF-401), NSF-61/CAN-61, NSF-372 Lead Free, NSF-401, AB100, NSF/ANSI/CAN 61: Q ≤ 1.0, TAS, UL 399/CSA C22.2 No.120, UL Certified (US and Canada), cUPC Certified)

Code 33820062

Finish

304 Stainless Steel (SS)

Downloads

- DRS110_DRS115 Refrigerated Single Level Cooler Installation Instructions.pdf
- DRS110_DRS115 Unrefrigerated Single Level Cooler Installation Instructions.pdf
- FA3000 DRS110_115_120_125 Drop Down Filter Assembly Installation Instructions.pdf
- FC3000 Replacement Water Filter Cartridge Installation Instructions.pdf
- DropSpot Bottle Fillers and Water Coolers Brochure.pdf
- DropSpot™ Care and Cleaning Guide.pdf
- Additional Downloads

Videos

- Sloan DropSpot™ Bottle Fillers and Water Coolers
- Sloan DropSpot™ Bottle Fillers and Water Coolers Now at Wrigley Field

WARNING: Cancer and Reproductive Harm – www.P65Warnings.ca.gov

Sloan 10500 Seymour Ave, Franklin Park 800.982.5839 sloan.com

Details

- Mounting: On-wall
- Configuration: Bottle Filler with Single-level Cooler
- Filter Option: Filtered (FIL)
- Refrigeration Option: Unrefrigerated (UNREF)
- Finish: 304 Stainless Steel (SS)
- Full Load Amps: 5.3
- Installation Location: Indoor
- Bottle Filler Water Flow Rate: Up to 1.2 gpm (4.5 Lpm)
- Bubbler Flow Rate: 0.3 gpm (1.1 Lpm)

Features

Sloan Single Station Bottle Filler Drinking Fountain Combo available in both Stainless and Black, filtered and unfiltered, refrigerated and unrefrigerated options.

- Touch-free sensor operated bottle filler with 20 second max run time, Up to 1.2 gpm fill rate for quick fill with laminar flow
- All models SC Argus® Pro compatible for remote water monitoring, filter alerts, automated line-flush scheduling, and documentation across one or multiple facilities; subscription required
- ADA compliant when installed properly
- Backlit LED light that illuminates bottle filling area when sensor is activated, Soft ambient white light to indicate filter status
- Bottle Counter Display indicates the number of 16 oz plastic bottles saved as well as ounces of water dispensed
- Rough-in matches other manufacturers' recommended rough-in locations for easy replacement
- Antimicrobial bubbler, push bar, and other components
- Drop-down door assembly provides easy access to filter
- Patent pending push bar designed to be activated at any touch point and to provide easy access for cartridge replacement
- Effectively reduces Total PFAS, lead, microplastics, cysts, Particulates Class 1, and chlorine

Recommended specifications

Sloan's DropSpot™ On-wall Bottle Filler with Single-level Cooler Filtered Refrigerated Stainless. Bubbler shall deliver a 0.3 gpm flow. Basin and cabinet shall be constructed from 304 stainless steel with satin finish. Bottle filler shall include sensor operated activation with a 20 second maximum run time. Bottle counter display indicates the number of 16 oz plastic bottles saved as well as the ounces of water dispensed for water consumption tracking. White light indicates the water filter status. Unit shall include LED lights that illuminate the bottle filling area. Bottle filler housing construction shall be stainless steel with satin finish. Bottle filler shall provide up to 1.2 gpm flow rate with a laminar flow. Push bar shall be activated by any touch point on the bar and shall be opened by Sloan access key. Filter drop-down assembly shall be opened by Sloan access key. Filter used in the unit shall have capacity of 3000 gallons at a minimum, and shall reduce Total PFAS, lead, microplastics, cysts, Particulates Class 1, and chlorine.

Power

- (Standard) 115VAC
- 60Hz
- 5.3A
- Provide Receptacle on GFCI Protected Circuit

Warranty

View Warranty Information

Notes

All information contained within this document subject to change without notice.
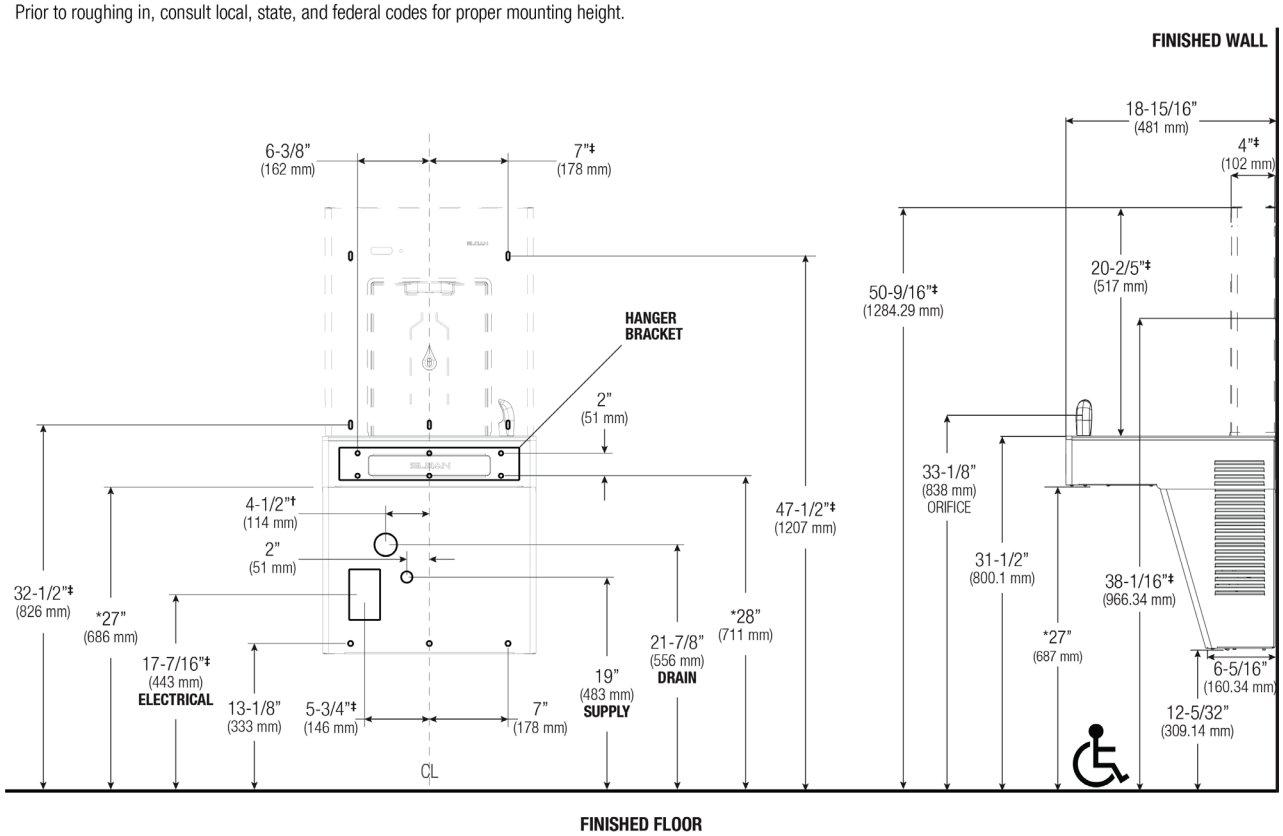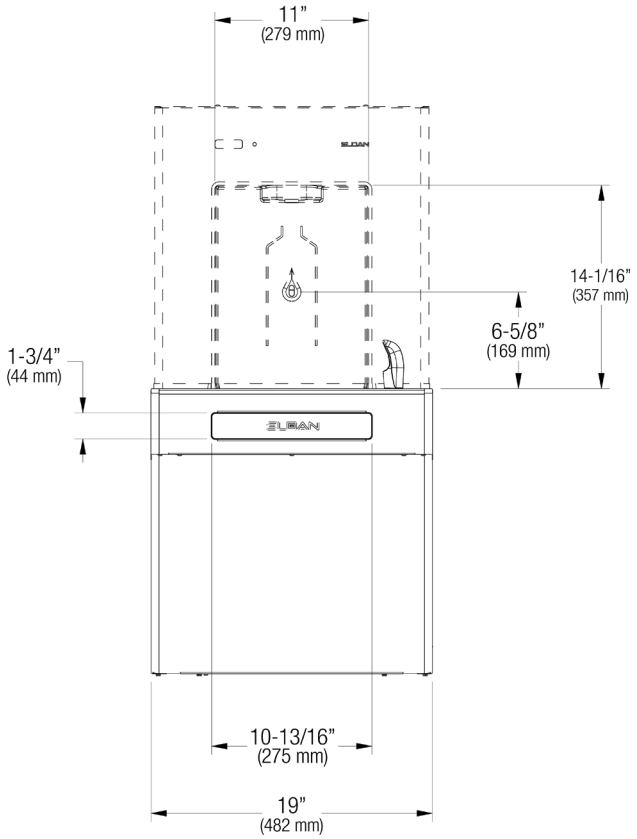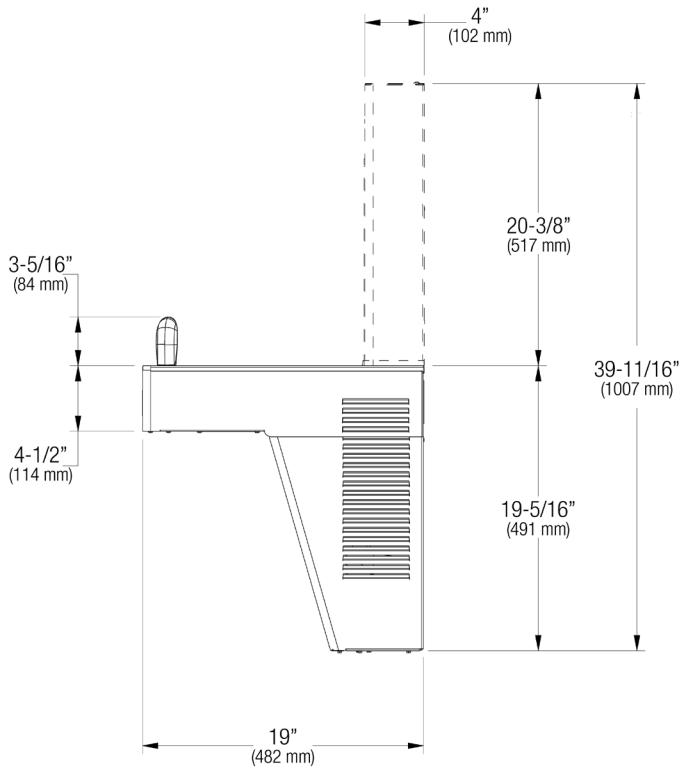
Prior to roughing in, consult local, state, and federal codes for proper mounting height.