PWT™ Accessory

MCR-139

Product description

PWT System Lavatory/Shower Solenoid.

Compliances & Certifications

(BAA Compliant)

Code 3375011

Downloads

- Programmed Water Technologies (PWT) Brochure.pdf
- Additional Downloads

Videos

- Sloan – Company Overview

WARNING: Cancer and Reproductive Harm – www.P65Warnings.ca.gov

Sloan 10500 Seymour Ave, Franklin Park 800.982.5839 sloan.com

Features

- Electronically operated solenoid w/ integral filter used to supply hot or cold water to lavatories or pre-mixed water to a shower.
- Electronically controls water run-times to lavatory and shower fixtures
- 160 degrees F maximum water temperature
- Used in conjunction with PWT control modules to provide accurate control of lavatory or shower run times
- Seven models available
- Accessories:
- - MCR-29-A 3/8 NPTM to 3/8 O.D. tube adapter kit (order separately)
- MCR-86-200 200' 3/8 O.D. nylon tubing (order separately)
- ETF-1003-240 20' Single Wire Extension Cord Kit (order separately)
- ETF-1003-600 50' Single Wire Extension Cord Kit (order separately)
- 24 VAC – 50/60 Hz operating voltage
- Current: In Rush 12 VA (500 mA)
- Holding 4.63 V A (193 mA)
- Power Consumption: 7 WATTS
- 160°F maximum water temperature
- Brass body w/integral 'Y' strainer (80 mesh)
- .375-18 NPTF Thread at inlet and outlet
- Stainless steel valve seat
- Includes 15' cable w/ 6 position, 4 pin RJ-11 connector

Warranty

View Warranty Information

Notes

All information contained within this document subject to change without notice.

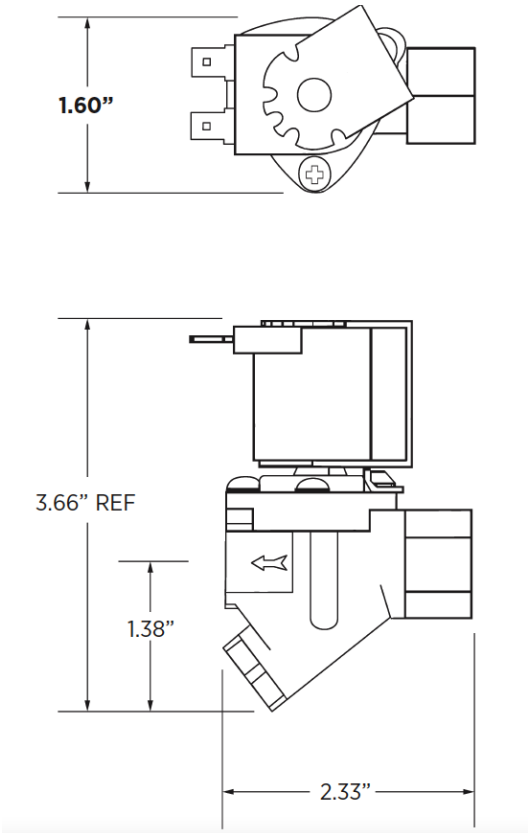
1.60”
3.66” REF
1.38”
2.33”