Royal® Solenoid (less sensor) Flushometer

ROYAL 603 ES-1.6-RB-HW-24V

Product description

1.6 gpf, Rough Brass Finish, Fixture Connection Rear Spud, Single Flush, Hardwired, Solenoid-Operated, 24V, Royal® Concealed Solenoid (less sensor) Hardwired Water Closet Flushometer.

Compliances & Certifications

(BAA Compliant, BABAA Compliant, IAPMO, UL Certified (US), cUPC Certified)

Code 3918115

Finish

Rough Brass (RB)

Downloads

- Concealed Flushometer Installation Instructions for Stainless Steel Fixtures.pdf
- Control Stop Repair and Maintenance Guide.pdf
- Flush Connections Flanges Repair and Maintenance Guide.pdf
- Additional Downloads

Videos

- Sloan – Company Overview

WARNING: Cancer and Reproductive Harm – www.P65Warnings.ca.gov

Sloan 10500 Seymour Ave, Franklin Park 800.982.5839 sloan.com

Details

- Flush Volume: 1.6 gpf (6.0 lpf)
- Finish: Rough Brass (RB)
- Power Type: Hardwired (HW)
- Valve: Diaphragm
- Valve Body Material: Semi-red Brass
- Fixture Type: Water Closet
- Fixture Connection: Rear Spud
- Rough-in Dimension: 16" (406mm)
- Spud Coupling: 1.5" (38mm)
- Supply Pipe: 1" (25mm)
- Voltage: 24V (24V)

Features

- PERMEX® Synthetic Rubber Diaphragm with Dual Filtered Fixed Bypass
- Valve body, Cover, Tailpiece and Control Stop shall be in compliance with ASTM Alloy Classification for Semi-Red Brass
- Valve shall be in compliance to the applicable sections of ASSE 1037

Recommended specifications

Valve Body, Cover, Tailpiece and Control Stop shall be in conformance with ASTM Alloy Classification for Semi-Red Brass. Valve shall be in compliance with the applicable sections of ASSE 1037 and ANSI/ASME 112.19.2.

Electrical specifications

- Solenoid Operator: 24 VAC
- Transformers (Specify Separately):
  - EL-154/0345154
  - EL-342/0345999

Valve Operating Pressure (Flowing)

15-80 psi (103 - 552 kPa). Specific fixtures may require greater minimum flowing pressure - consult manufacturer requirements.

Warranty

View Warranty Information

Notes

All information contained within this document subject to change without notice.

Looking for other variations of the ROYAL 603 ES product? View the general spec sheet with all options.
Find a compatible urinal for this flushometer.
Find a compatible water closet for this flushometer.

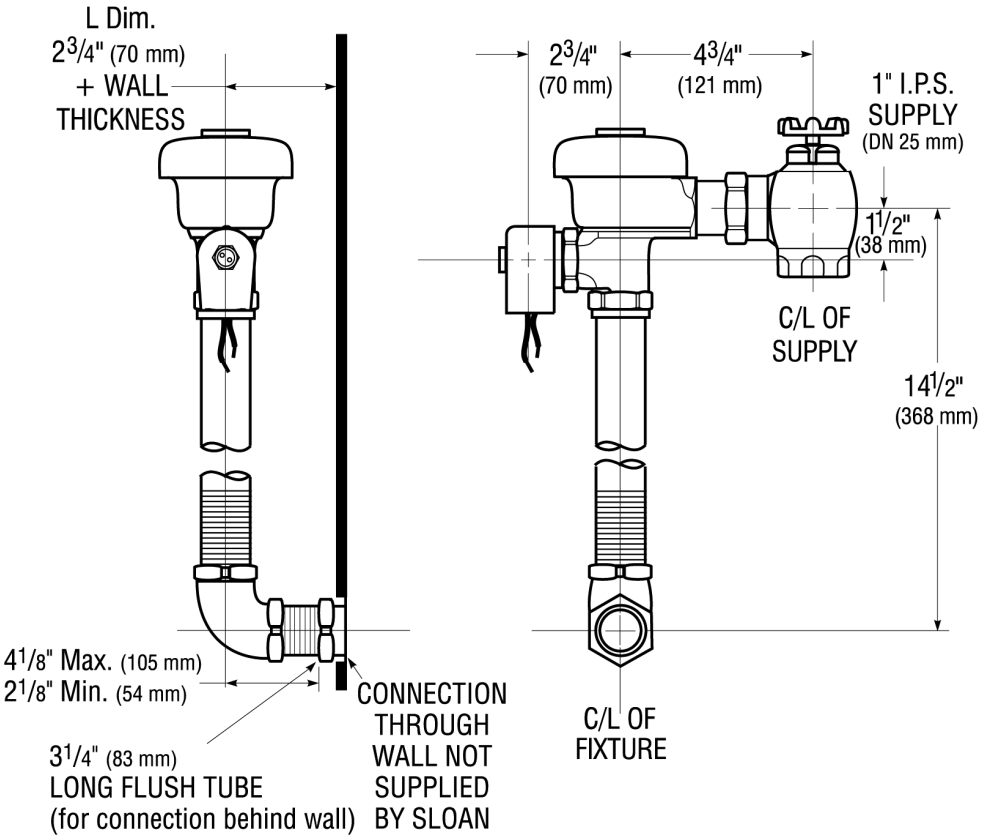
L Dim.
2 3/4" (70 mm)
+ WALL
THICKNESS
2 3/4"
(70 mm)
4 3/4"
(121 mm)
1" I.P.S.
SUPPLY
(DN 25 mm)
1 1/2"
(38 mm)
C/L OF
SUPPLY
14 1/2"
(368 mm)
4 1/8" Max. (105 mm)
2 1/8" Min. (54 mm)
3 1/4" (83 mm)
LONG FLUSH TUBE
(for connection behind wall)
CONNECTION
THROUGH
WALL NOT
SUPPLIED
BY SLOAN
C/L OF
FIXTURE