Water Connects Us®

Installation Instructions
Code No. 68160051
Rev. 2 (08/2026)

QSGR82000, SINK SYSTEM w/Enclosure

Two Station Quartz

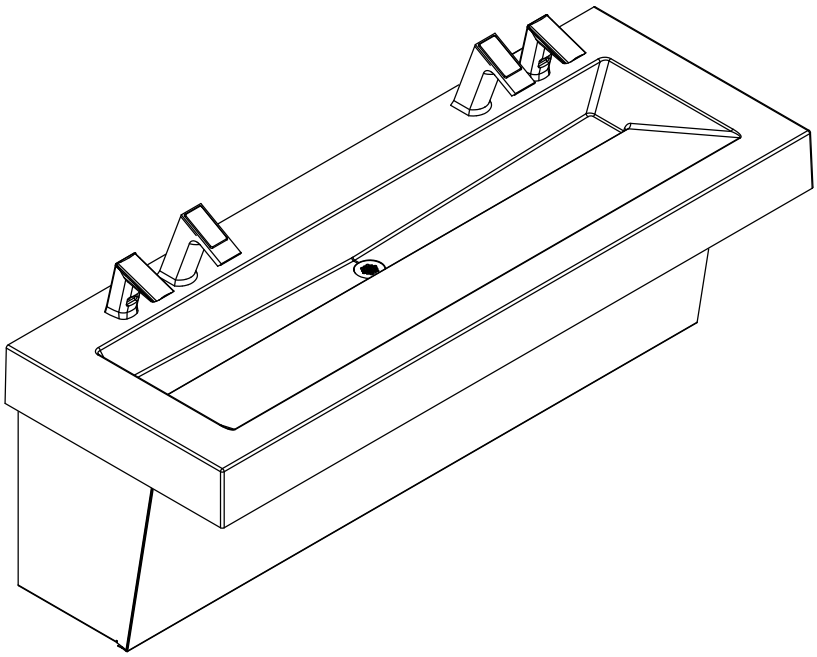

Note: Water and soap components are shown for reference only and may not depict actual components.

Important

Read this entire installation manual to ensure proper installation. When finished with the installation, file this manual with the owner or maintenance department. Compliance and conformity to local codes and ordinances is the responsibility of the installers.

Separate parts from packaging and make sure all parts are accounted for before discarding any packaging material. If any parts are missing, do not begin installation until all parts are obtained.

Make sure that all water supply lines have been flushed and completely turned off before starting the installation. Debris in supply lines can cause valves to malfunction.

Turn off electrical power to the electrical outlets, then unplug units prior to installation. Electrical power MUST remain off until installation is complete.

Installers hardware must be appropriate for wall construction. Wall anchors and mounting fasteners MUST have a minimum pull-out rating of 1,000 lbs.

For standard height mounting, DO NOT exceed the recommended 34 inch distance from the top of the lav deck to the finished floor. To meet ADA requirements the lav deck cannot not exceed the 34 inch maximum height dimension.

Wear all proper safety equipment prior to installation

Tools and Supplies Required for Installation

- Electric drill for drilling anchor holes.
- Standard sockets, basin wrench, and open end wrench set for installing anchoring fasteners and faucets.
- Pipe wrench for installing drain lines.
- Phillips and straight blade screwdrivers.
- Tubing cutter
- Level
- Carpenter's square
- Caulk gun
- 1/2" NPT hot/cold or tempered supply piping
- 1 1/2" NPT drain piping including p-trap
- Adhesive: Loctite® PL Premium® FAST GRAB Polyurethane Construction Adhesive
- 110 volt GFCI protected electrical outlet for 100-120 VAC plug-in transformer
- Screen filter(s) included with faucet(s)
- Backing supplied by others to meet local codes

Prior to Installation

CAUTION

- ADEQUATE STRUCTURAL SUPPORT IN OR BEHIND THE WALL IS REQUIRED.
- ALL ELECTRICAL WIRING IS TO BE INSTALLED IN ACCORDANCE WITH NATIONAL/LOCAL CODES AND REGULATIONS. ELECTRICAL OUTLETS SHOULD BE RECESSED AND INSTALLED PRIOR TO INSTALLATION.
- ALL PLUMBING SHOULD BE INSTALLED IN ACCORDANCE WITH APPLICABLE CODES AND REGULATIONS.
- BEFORE CONNECTING FLEX HOSES TO SUPPLY STOPS, FLUSH ALL WATER LINES UNTIL WATER IS CLEAR.
- HOT AND COLD WATER SUPPLY LINES/TEMPERED SUPPLY LINE AND DRAIN LINES. RECOMMENDED TO HAVE CONTROL STOPS ON WATER SUPPLY LINES IN PLACE PRIOR TO INSTALLATION.

10500 Seymour Ave Franklin Park, IL 60131 | Phone: +1.800.982.5839 | Fax: +1.800.447.8329 | www.Sloan.com
Copyright © 2026 Sloan. All rights reserved.

Sink Location

Determine the appropriate wall location for the Lavatory System. Refer to original spec sheets for correct placement of electrical and plumbing locations. If wall is not load bearing, a carrier may be required behind the wall. Refer to the appropriate Rough-In diagram for Lavatory System dimensions. Prior to Lavatory System installation, electric wiring, water supply and drain must be installed.

Sloan® Limited Warranty Summary

Sloan Valve Company ("Sloan"), warrants its products against defects in materials and workmanship, excluding damage caused by matters beyond Sloan's reasonable control. Instructions for filing claims can be found in the Limited Warranty which can be obtained at www.sloan.com or by requesting a free copy by telephone at 888.756.2614. Sloan will repair or replace your defective product, or provide a refund, as your exclusive remedy. This is only a general summary of Sloan's Limited Warranty so it is important to note that the specific terms, conditions, limitations and exclusions, including the duration of warranty coverage for your particular Sloan product, are contained in the actual Sloan Limited Warranty. The Limited Warranty is subject to applicable laws in your country, state, province or other jurisdiction—and disputes arising under the Limited Warranty are to be resolved by binding arbitration unless you provide Sloan with an opt-out notice no later than 30 days after your purchase date. In case of a conflict with this summary, the terms and conditions set forth in the complete Limited Warranty will prevail.

Components

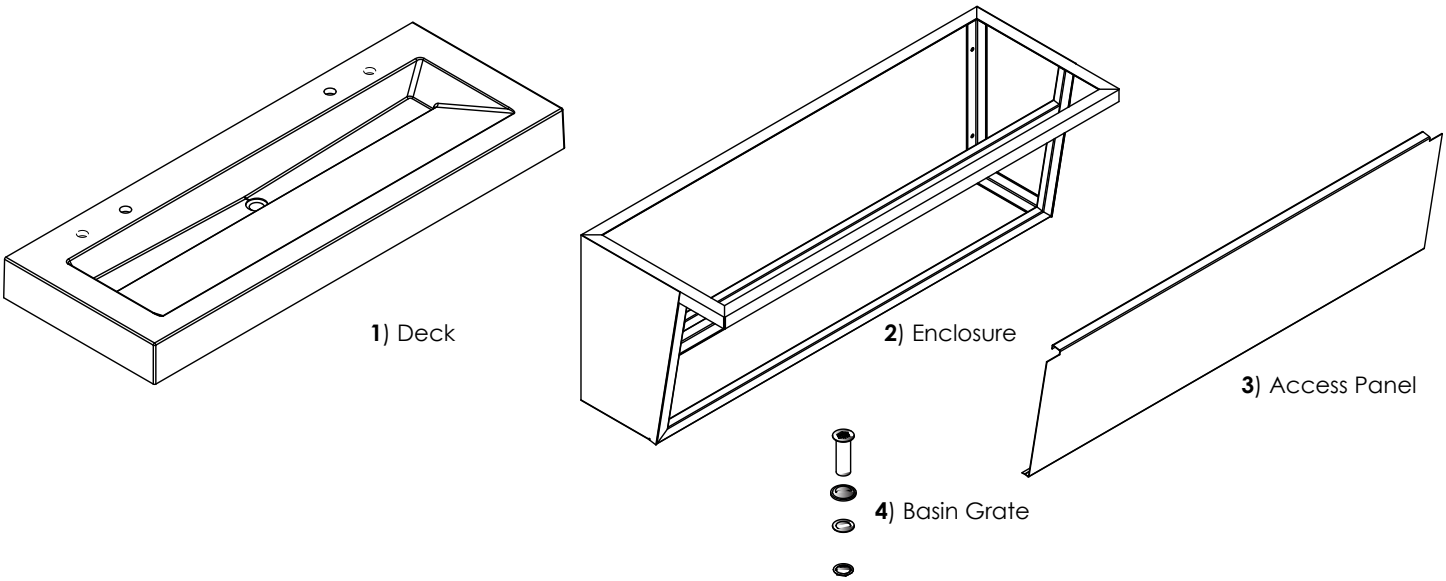

Components List

Description	Item Number	Quantity
QSGR82000, Two Station, Deck	1	1
Enclosure	2	1
Access Panel	3	1
Grid Strainer	4	1

10500 Seymour Ave Franklin Park, IL 60131 | Phone: +1.800.982.5839 | Fax: +1.800.447.8329 | www.Sloan.com
Copyright © 2026 Sloan. All rights reserved.

Rough-In;

Figure 1

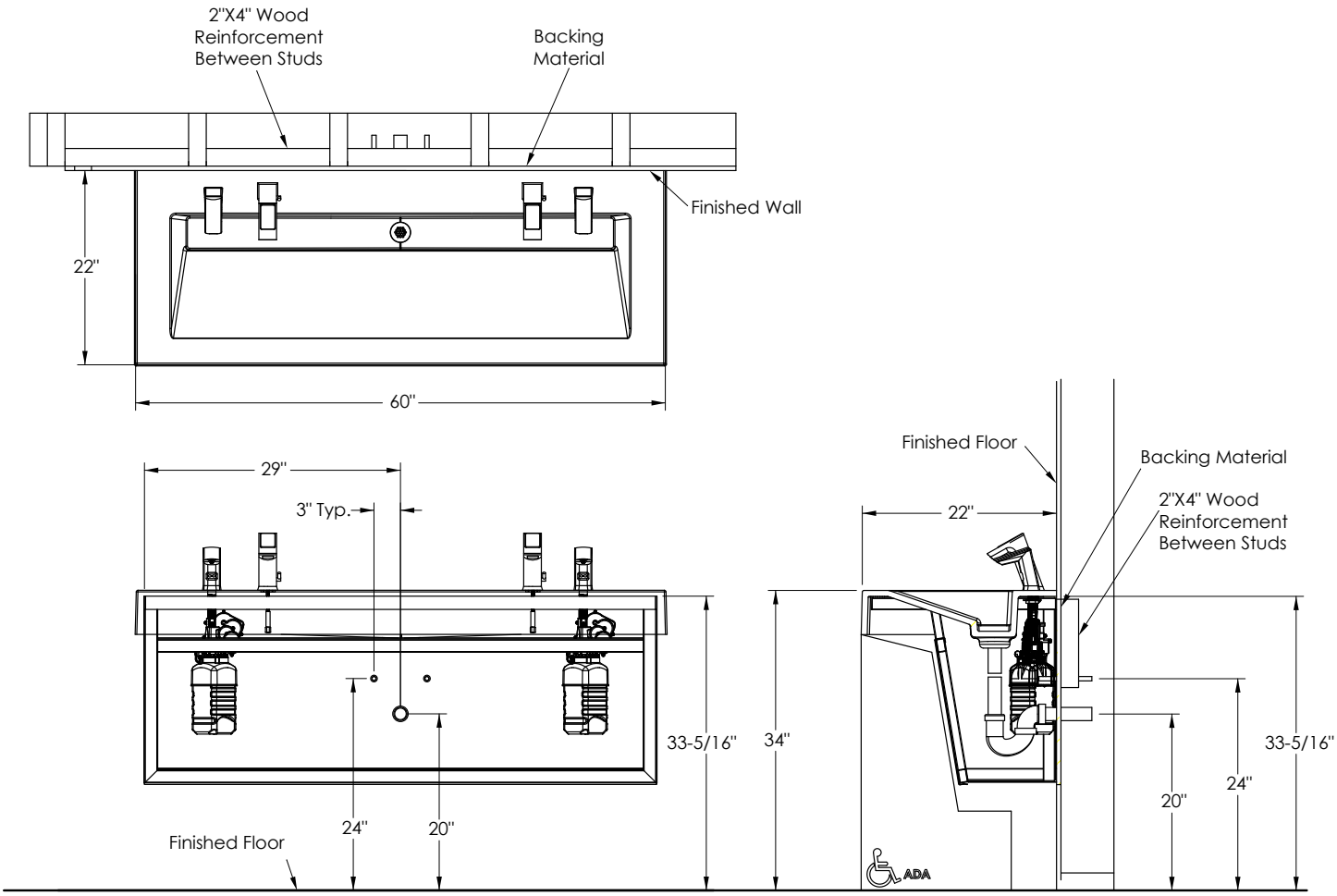

Note: Backing material should equal thickness of drywall, 1/2" min.

Copyright © 2026 Sloan. All rights reserved.

Backing and Enclosure Installation

Figure 2

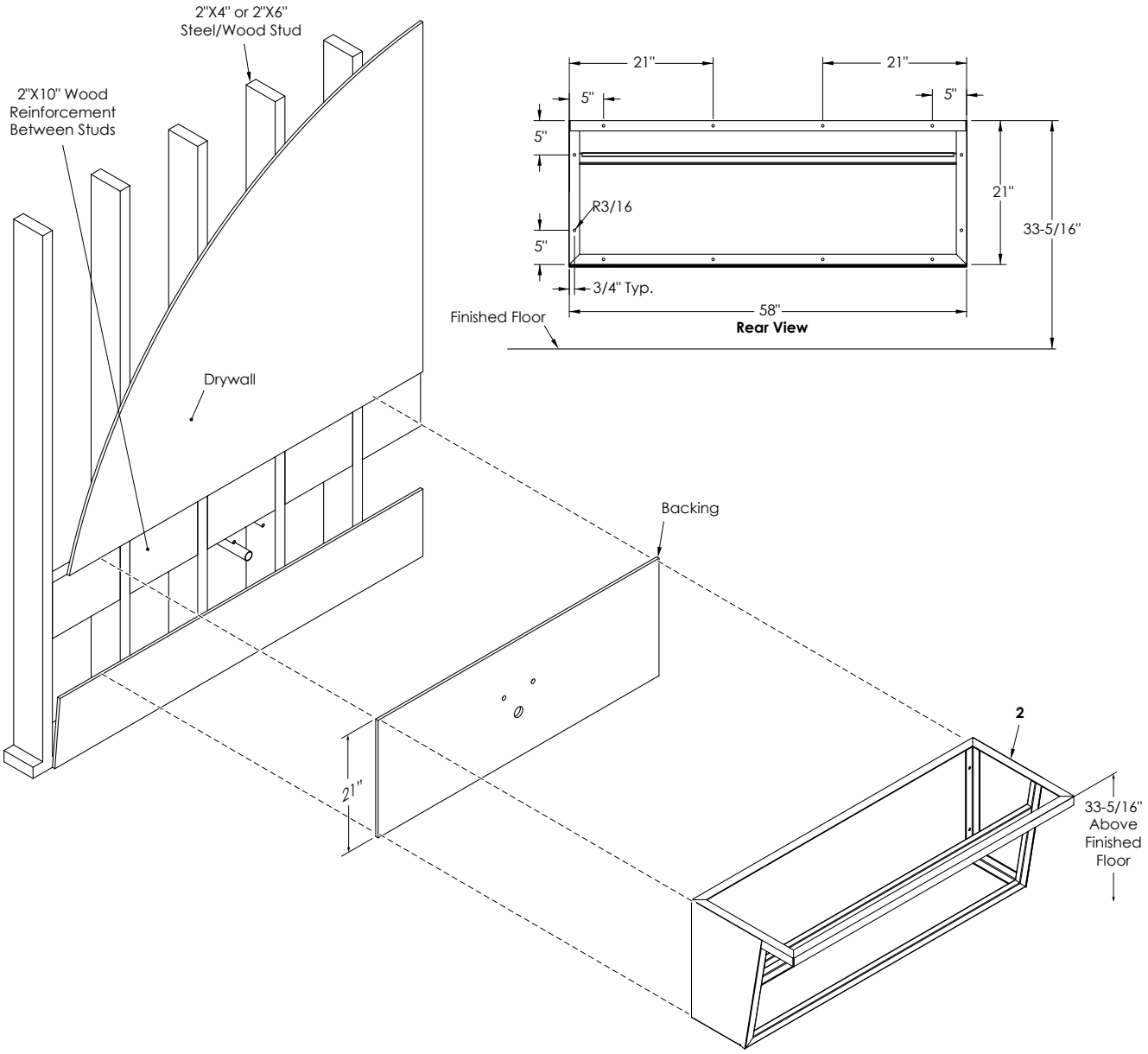

Notes:

- Due to manufacturer tolerances, all dimensions are for reference only.
- Enclosure must be shimmed to wall to make sure proper leveling and straightness.
- Wood 2"X10" may need to be notched to allow clearance for electrical box and plumbing. DO NOT cut wall support studs.

1. Install Backing (Figure 2) onto wall studs.
   Note: *Backing supplied by others to meet local codes.*
   a. If drywall is present, refer to rough-in, (Figure 2), measure outer dimensions of Enclosure (2) and cut out drywall window.
   b. Remove drywall window.
   c. Pre-drill/cut holes for plumbing and electrical.
   d. Install backing into cutout drywall window.

2. Refer to the template in (Figure 2), mount the Enclosure (2) to the backing. Ensure that Enclosure (2) is level and the proper distance from the floor.
   Note: *Anchor Enclosure to wall using 1,000 lb pull out mounting fasteners for 3/8" holes (not supplied).*
   a. Using mounting fasteners secure Enclosure (2) onto backing, making sure that the top of Enclosure (2) is 33 5/16 inches above finished floor. (ADA specifications)

10500 Seymour Ave Franklin Park, IL 60131 | Phone: +1.800.982.5839 | Fax: +1.800.447.8329 | www.Sloan.com
Copyright © 2026 Sloan. All rights reserved.

Faucet Installation

Notes:

- For ease of deck installation, leave the deck lying on its front (if no bag hooks are installed) or lying on its back and install component spouts.
- Components shown for reference only.

Figure 3

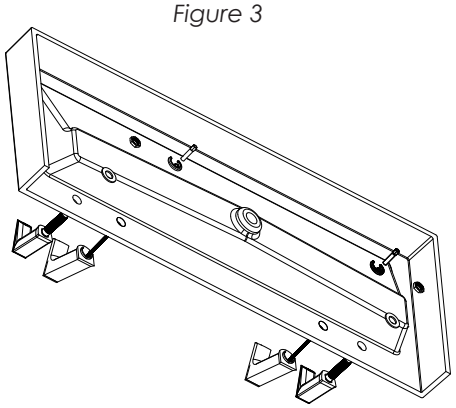

3. Install faucet (Figure 3) and optional soap dispenser onto sink according to manufacturer's instructions.

Sink Installation

Figure 4

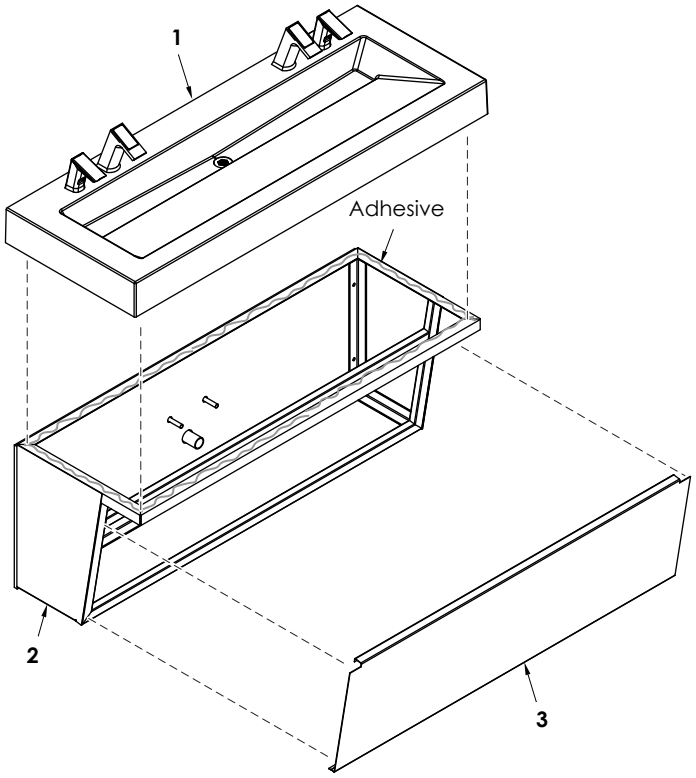

4. Install Deck (1, Figure 4) onto Enclosure (2).
   a. Apply adhesive (not supplied) to the top of Enclosure (2).
   b. Lower Deck (1) onto Enclosure (2). Shim all gaps between Enclosure (2) and Deck (1).
   c. Install all water connections and drain lines.

5. Remove any and all protective tape and/or wrap. Attach Access Panel (3) on Enclosure (2).

Copyright © 2026 Sloan. All rights reserved.

Care and Cleaning SloneStone® Quartz

For conventional cleaning use warm, soapy water or specialized stone cleaners with a non-abrasive cleaning pad or cloth.

DO NOT USE: Abrasive pads (i.e. 3M ScotchBrite® green scrub pads), steel wool, pumice, cleaners that contain; bleach, acetone, paint remover or stripper, methylene chloride, trichloroethane, strong chemicals or solvents. These products can damage or cause permanent discoloration to the surface.

For dry stains, allow the soapy water or specialized stone cleaner time to soak the area, then wipe the stain away with a clean cloth and dry with a microfiber cloth.

For non-water-based or oil-based stains, such as gum or food, gently scrape the stain off with a plastic material (i.e. a plastic knife), and the proceed with normal cleaning and dry with a microfiber cloth.

Permanent markers or ink may adhere to the surface and should be avoided. Spray the area with a Quartz intensive cleaner, or equivalent, and allow the cleaner to soak for 15 minutes. Wipe the cleaner away with a clean cloth, then thoroughly rinse the area. Dry with a microfiber cloth.

End of Installation Instructions

10500 Seymour Ave Franklin Park, IL 60131 | Phone: +1.800.982.5839 | Fax: +1.800.447.8329 | www.Sloan.com
Copyright © 2026 Sloan. All rights reserved.