Water Closet & Flushometer Combo

WETS-2001.1201-1.1-CP-CN

Product description

1.1 gpf, Polished Chrome Finish, Fixture Connection Top Spud, Single Flush, Carbon Neutral, Electrical Override, Solar, ST-2009 Water Closet and SOLIS 8111 Flushometer.

Compliances & Certifications

(BAA Compliant, BREEAM Materials Credit, BREEAM Water Credit, Carbon Neutral, Carbon Offset, EPD, Green Globes Credit, Green Globes Water, HPD, LEED Credit, LEED HPD, LEED Water, Satisfies LEED Credits, WELL Building Standard)

Code 20011201T

Downloads

- Royal Exposed Installation Instructions.pdf
- Royal Exposed Spanish Installation Instructions.pdf
- Sloan Diaphgram Chart (SP) Repair and Maintenance Guide.pdf
- SS:ST:SU:WETS:WEUS Fixtures Repair and Maintenance Guide.pdf
- Fixture Brochure.pdf
- Additional Downloads

Videos

- Sloan – Company Overview

WARNING: Cancer and Reproductive Harm – www.P65Warnings.ca.gov

Sloan 10500 Seymour Ave, Franklin Park 800.982.5839 sloan.com

Details

- Flush Volume: 1.1 gpf (4.2 lpf)

Features

- Handle Packing, Main Seat, Stop Seat and Vacuum Breaker Molded from PERMEX® Rubber Compound for Chloramine resistance
- User friendly three (3) second Flush Delay
- "Low Battery" Flashing LED
- Sweat solder adapter with cover tube and cast wall flange with set screw
- State-of-the-art photovoltaic technology delivers solar operation
- Solar Powered- The sensor assembly is powered by a solar cell that will harvest power from the artificial indoor light (incandescent, fluorescent or LED), and use it as the energy source. The solar cell can provide approximately 100% power with 650 illuminance (lux).
- Four (4) Size AA Battery Back-up Power Source
- Operates by means of an infrared sensor with multiple-focused, lobular sensing fields for high and low target detection
- Fixed Metering Bypass and No External Volume Adjustment to Ensure Water Conservation
- Flex Tube Diaphragm designed for improved life and reduced maintenance
- Designed to maximize and complement Sloan flushometers
- Universal model works with Sloan flushometers from 1.1 to 1.6 gpf
- Durable, hygienic vitreous china construction with elongated rim
- Syphon jet flushing achieves 1000g Map Scores when used with Sloan flushometers
- IAPMO certified to meet or exceed ASME A112.19.2 standards
- WaterSense compliant when used with a WaterSense compliant flushometer

Components

- Flushometer: Code 3370085
- Water Closet: Code 2102009

Warranty

View Warranty Information

Notes

All information contained within this document subject to change without notice.

^To obtain the certificate for your carbon-neutral products, please reach out to Sloan's customer support:customer.service@sloan.com.

Static load tested according to the procedure outlined in Section 6.7 of ASME A112.19.2. Not recommended for bariatric use.

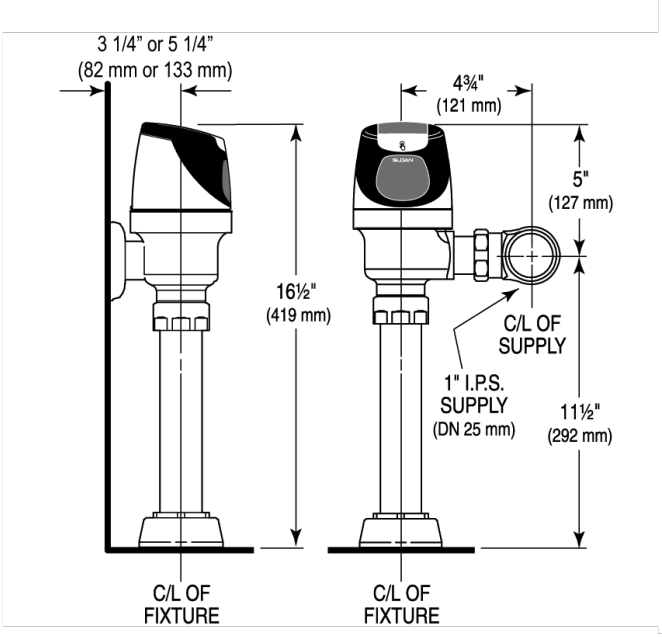
3 1/4" or 5 1/4"
(82 mm or 133 mm)
4¾"
(121 mm)
5"
(127 mm)
16½"
(419 mm)
C/L OF
SUPPLY
1" I.P.S.
SUPPLY
(DN 25 mm)
11½"
(292 mm)
C/L OF
FIXTURE
C/L OF
FIXTURE

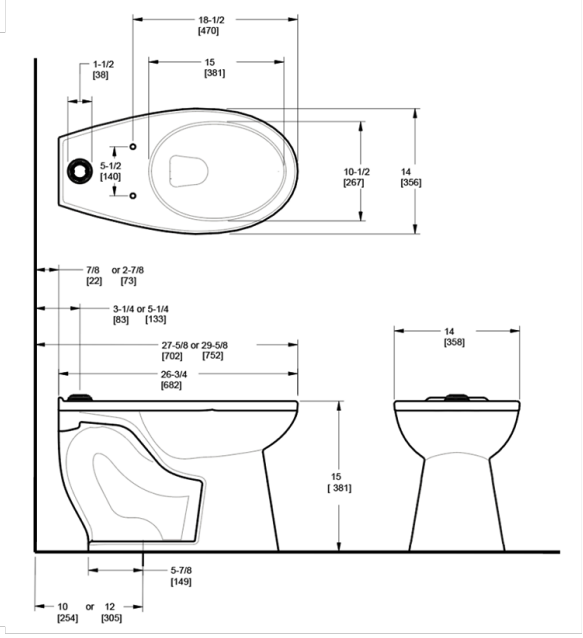
18-1/2
[470]
1-1/2
[38]
15
[381]
5-1/2
[140]
10-1/2
[267]
14
[356]
7/8 or 2-7/8
[22] [73]
3-1/4 or 5-1/4
[83] [133]
27-5/8 or 29-5/8
[702] [752]
26-3/4
[682]
14
[358]
15
[381]
5-7/8
[149]
10 or 12
[254] [305]