ECOS® Sensor Flushometer

ECOS 8111-1.28-BB

Product description

1.28 gpf, Brushed Brass Finish, Fixture Connection Top Spud, Single Flush, Electrical Override, Battery, ECOS® Exposed Sensor Water Closet Flushometer.

Compliances & Certifications

(ADA Compliant*, BAA Compliant, BABAA Compliant, IAPMO, cUPC Certified, EPA WaterSense Listed)

Code 33704048

Finish

Brushed Brass (BB)

Downloads

- Sloan ECOS Single_Dual-Flush Flushometer & Retrofit Valve Installation Instructions.pdf
- Sloan Ecos Valve (Spanish) Installation Instructions.pdf
- Control Stop Repair and Maintenance Guide.pdf
- Flush Connections Flanges Repair and Maintenance Guide.pdf
- Flushometer Pressure Gauges.pdf
- Finishes Brochure.pdf
- Additional Downloads

Videos

- Sloan Finishes

WARNING: Cancer and Reproductive Harm – www.P65Warnings.ca.gov

Sloan 10500 Seymour Ave, Franklin Park 800.982.5839 sloan.com

Details

- Flush Volume: 1.28 gpf (4.8 lpf)
- Finish: Brushed Brass (BB)
- Power Type: Battery
- Valve: Diaphragm
- Valve Body Material: Semi-red Brass
- Fixture Type: Water Closet
- Fixture Connection: Top Spud
- Rough-in Dimension: 11.5” (292mm)
- Spud Coupling: 1.5” (38mm)
- Supply Pipe: 1” (25mm)
- Override: Electrical

Features

- Deploys an infrared sensor with multiple-focused, lobular sensing fields for high and low target detection
- User-friendly, three-second flush delay
- High copper, low zinc brass castings for dezincification resistance
- Fixed metering bypass and no external volume adjustment to ensure water conservation
- Valve body, Cover, Tailpiece and Control Stop shall be in compliance with ASTM Alloy Classification for Semi-Red Brass
- Valve shall be in compliance to the applicable sections of ASSE 1037

Recommended specifications

Valve Body, Cover, Tailpiece and Control Stop shall be in conformance with ASTM Alloy Classification for Semi-Red Brass. Valve shall be in compliance with the applicable sections of ASSE 1037 and ANSI/ASME 112.19.2.

Electrical specifications

- Arming Delay: 16 seconds
- Flush Delay: 3 seconds
- Sensor Range: 22”-42” (559 - 1067mm)

Valve Operating Pressure (Flowing)

15-80 psi (103 - 552 kPa). Specific fixtures may require greater minimum flowing pressure - consult manufacturer requirements.

Battery Specifications

Usage	4-AA Battery Service Life†			
	14.5 yrs	12 yrs	7.2 yrs	6 yrs
per month	500	1,000	3,000	4,000
per day	25	50	150	200

† Service life varies according to actual usage and restroom conditions
Battery shelf life: Alkaline= ~10 years - Lithium= ~25 years

Warranty

View Warranty Information

Notes

All information contained within this document subject to change without notice.

*Compliant with ADA accessibility requirements when installed according to ADA standards.
WaterSense compliant when used with a 1.28 gpf (4.8 lpf) WaterSense fixture.

Looking for other variations of the ECOS 8111 product? View the general spec sheet with all options.
Find a compatible urinal for this flushometer.
Find a compatible water closet for this flushometer.

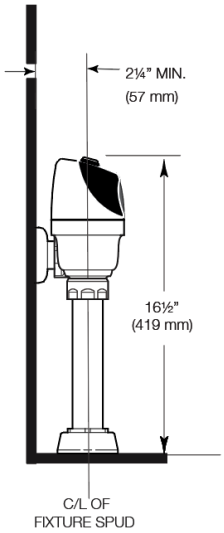

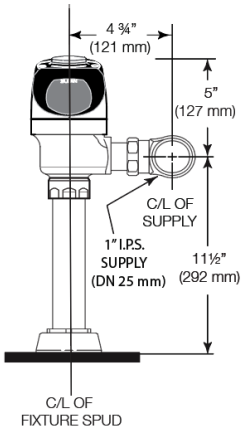

ALTERNATE ADA INSTALLATION
Lower water supply rough-in to 10" (254 mm) and mount grab bar at the 36" (914 mm) maximum allowed height (top of grab bar at 36").

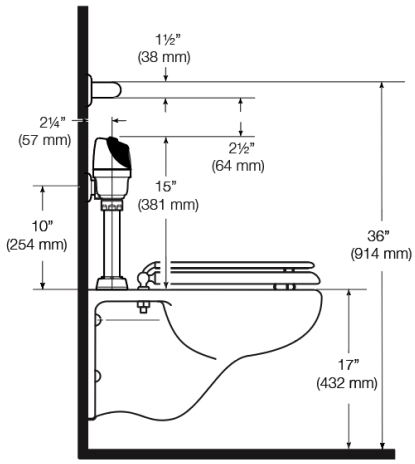

WHEN INSTALLING IN A HANDICAP STALL:
Per the ADA Guidlines (section 604.9.4) it is recommended that the grab bars be split or shifted to the wide side of the stall. If grab bars must be present over the valve, use the alternate ADA installation as shown to the right.