

Stainless Steel Sink

ESS-2100

Product description

Stainless Steel 1-Station Scrub Sink.

Compliances & Certifications

(BAA Compliant, BABAA Compliant, CSA Certified)

Code ESS-2100

Downloads

- Optima ESS-2000_3000 Series Installation Instructions
- EHS-1000-ESS-2000-3000 Series Repair and Maintenance Guide
- Sinks - Full Line Brochure
- Additional Downloads

Videos

- Sloan – Company Overview

⚠ WARNING: Cancer and Reproductive Harm – www.P65Warnings.ca.gov

Sloan 10500 Seymour Ave, Franklin Park 800.982.5839 sloan.com

Details

- Material:
  - Stainless Steel
- Mounting: Wall-Mounted
- Width: 30” (762mm)

Features

Single Station Stainless Steel Scrub Sink with Sensor Activated, 24 VAC, Chrome Plated Brass Hand Washing Faucet with the following features:

- Sink constructed from 16 gauge, Type 304 stainless steel with bead blast finish on sink bowl interior for superior wash-down characteristics
- 16 gauge “lift-out” style front access panel for easy maintenance access
- Unit supplied with 20” flexible supply hoses
- Sloan OPTIMA Faucet for hands-free operation
- Sink is shipped pre-plumbed for easy installation

Recommended specifications

Sloan Stainless Series Scrub Sink model no. ESS 2X00. Product to be made of 16 gauge type 304 stainless steel with Sloan sensor faucets. Sink design to be ADA compliant.

Suggested Faucets

Warranty

View Warranty Information

Notes

All information contained within this document subject to change without notice.

Find a compatible faucet for this sink.
Find a matching soap dispenser for this sink.

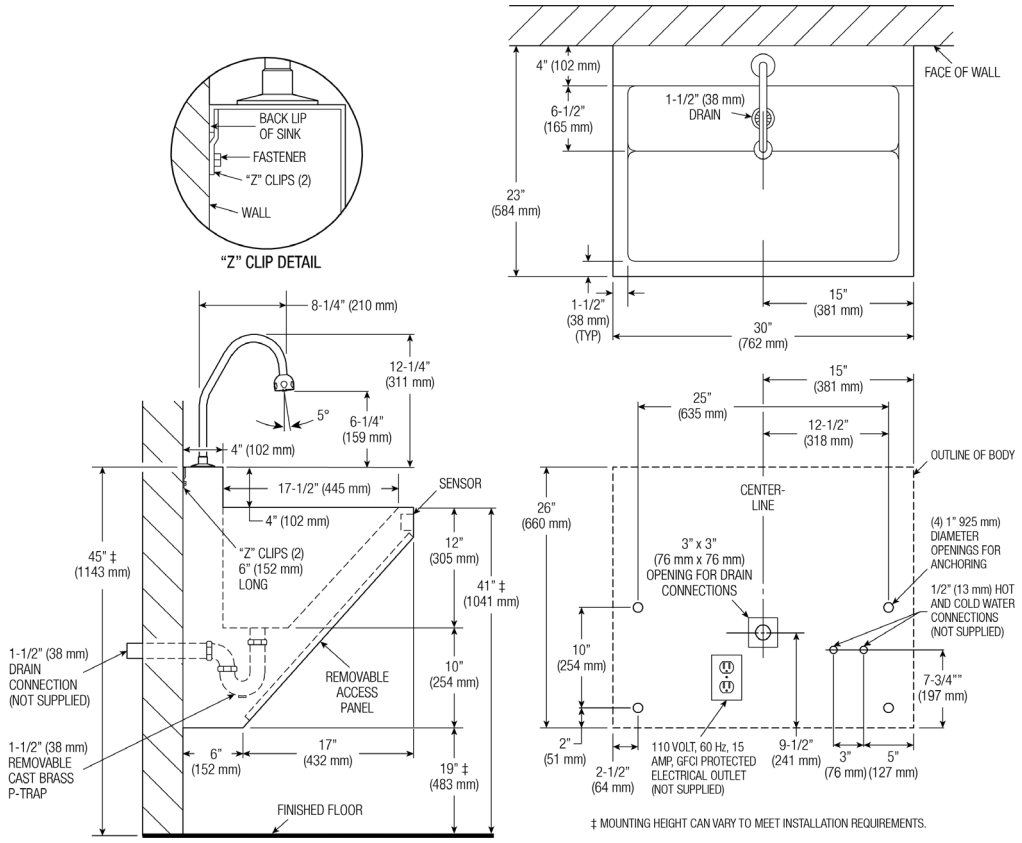
BACK LIP OF SINK
FASTENER
"Z" CLIPS (2)
WALL
"Z" CLIP DETAIL
4" (102 mm)
6-1/2" (165 mm)
1-1/2" (38 mm) DRAIN
FACE OF WALL
23" (584 mm)
1-1/2" (38 mm) (TYP)
15" (381 mm)
30" (762 mm)
8-1/4" (210 mm)
12-1/4" (311 mm)
5°
6-1/4" (159 mm)
4" (102 mm)
17-1/2" (445 mm)
SENSOR
4" (102 mm)
"Z" CLIPS (2) 6" (152 mm) LONG
45" ‡ (1143 mm)
12" (305 mm)
41" ‡ (1041 mm)
1-1/2" (38 mm) DRAIN CONNECTION (NOT SUPPLIED)
REMOVABLE ACCESS PANEL
10" (254 mm)
1-1/2" (38 mm) REMOVABLE CAST BRASS P-TRAP
6" (152 mm)
17" (432 mm)
19" ‡ (483 mm)
FINISHED FLOOR
15" (381 mm)
25" (635 mm)
12-1/2" (318 mm)
OUTLINE OF BODY
CENTER-LINE
26" (660 mm)
(4) 1" 925 mm) DIAMETER OPENINGS FOR ANCHORING
3" x 3" (76 mm x 76 mm) OPENING FOR DRAIN CONNECTIONS
1/2" (13 mm) HOT AND COLD WATER CONNECTIONS (NOT SUPPLIED)
10" (254 mm)
7-3/4"" (197 mm)
2" (51 mm)
2-1/2" (64 mm)
110 VOLT, 60 Hz, 15 AMP, GFCI PROTECTED ELECTRICAL OUTLET (NOT SUPPLIED)
9-1/2" (241 mm)
3" (76 mm)
5" (127 mm)
‡ MOUNTING HEIGHT CAN VARY TO MEET INSTALLATION REQUIREMENTS.