PWT™ Accessory

MCR-184

Product description

PWT System Waterproof Push Button Assembly.

Compliances & Certifications

(BAA Compliant)

Code 0375282

Downloads

- Programmed Water Technologies (PWT) Brochure.pdf
- Additional Downloads

Videos

- Sloan – Company Overview

WARNING: Cancer and Reproductive Harm – www.P65Warnings.ca.gov

Sloan 10500 Seymour Ave, Franklin Park 800.982.5839 sloan.com

Features

- Waterproof, thru-wall push button for use with any PWT controller. Activates water closets, lavatories and showers.
- Stainless-steel housing stands up to rough usage
- Through-wall or wall-mount push buttons for use with any PWT controller
- Activates water closets, lavatories and showers
- Various extension cord kits available to reach up to 200 feet

Warranty

View Warranty Information

Notes

All information contained within this document subject to change without notice.

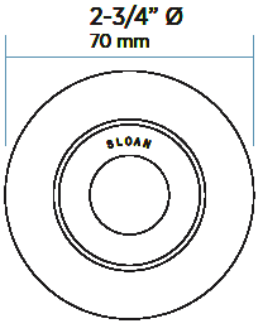
2-3/4" Ø
70 mm
SLOAN

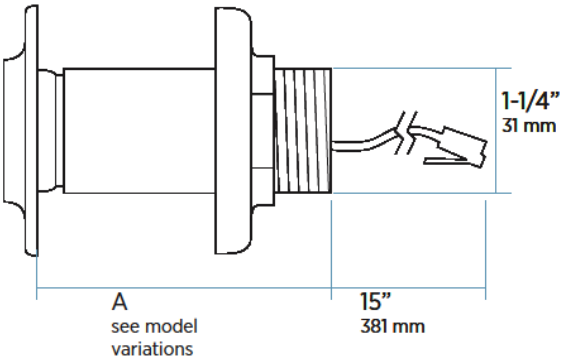
1-1/4"
31 mm
A
see model
variations
15"
381 mm