Urinal & Flushometer Combo

WEUS-7002.3001-0.25-CP-TMO-HW

Product description

0.25 gpf, Polished Chrome Finish, 0.75” Flush Connection, Fixture Connection Top Spud, Single Flush, 0.75” Inlet, 3/4” Control Stop, True Mechanical Override, Hardwired, Infrared, SU-7009 Urinal and SLOAN 186 SFSM Flushometer.

Compliances & Certifications

(ADA Compliant*, ASSE 1001, ASSE 1037, CEC Compliant, IAPMO, UL Certified (US), cUPC Certified, EPA WaterSense Listed)

Code 70023001

Downloads

- Sloan Exposed Installation Instructions.pdf
- Small Spud Urinal Installation Instructions.pdf
- EBV-500_550-A Installation Instructions.pdf
- Additional Downloads

Videos

- Sloan – Company Overview

WARNING: Cancer and Reproductive Harm – www.P65Warnings.ca.gov

Sloan 10500 Seymour Ave, Franklin Park 800.982.5839 sloan.com

Details

- Flush Volume: 0.25 gpf (0.9 lpf)

Features

- Flush volumes start as low as 1.0 gpf/3.8 Lpf
- Water conservation is aided by the ADA-compliant, non-hold-open handle, which prevents urinal from exceeding intended flush volume
- Flush accuracy is controlled by CID™ technology, also enhancing water efficiency
- Non-Hold-Open True Mechanical Override Full Flush Button
- Integrity of the product is maintained with the vandal-resistant stop cap
- Durability is facilitated with high copper, low zinc brass castings for dezincification resistance
- Adjustable tailpiece to accommodate different height requirements
- High chloramine resistant PERMEX® Synthetic Rubber Diaphragm with Linear Filtered Bypass and Vortex Cleansing Action
- Valve body, Cover, Tailpiece and Control Stop shall be in compliance with ASTM Alloy Classification for Semi-Red Brass
- Valve shall be in compliance to the applicable sections of ASSE 1037
- Designed to maximize and complement Sloan flushometers
- Small size and clean lines fits a large variety of applications and restroom looks
- Thorough washdown flushing action
- Vandal resistant stainless steel strainer included
- IAPMO certified to meet or exceed ASME A112.19.2 standards
- Water Sense listed by EPA that qualifies for most rebate programs
- Meets ADA guidelines and ANSI A117.1 requirements when installed accordingly

Recommended specifications

Valve Body, Cover, Tailpiece and Control Stop shall be in conformance with ASTM Alloy Classification for Semi-Red Brass. Valve shall be in compliance with the applicable sections of ASSE 1037 and ANSI/ASME 112.19.2.

Components

- Flushometer: Code 3782694
- Urinal: Code 1107009

Warranty

View Warranty Information

Notes

All information contained within this document subject to change without notice.

*Compliant with ADA accessibility requirements when installed according to ADA standards.

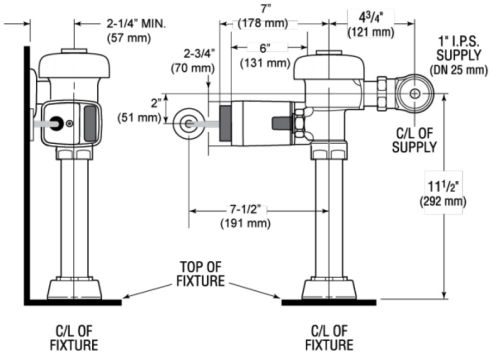

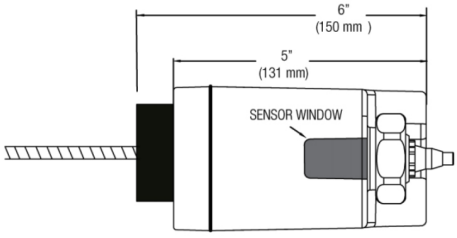

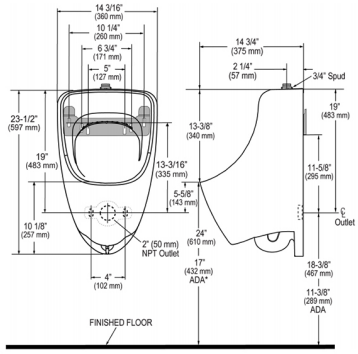

NOTE: ADA urinal rim height requirements allow all heights 17" and below. Sloan strongly recommends roughing in the drain to achieve a 16½" rim height or less to ensure compliance.