

Water Closet & Flushometer Combo

WETS-2453.1401-1.6-CP

Product description

1.6 gpf, Polished Chrome Finish, Fixture Connection Top Spud, Single Flush, Battery, ST-2459 Water Closet and G2 8111 Flushometer.

Compliances & Certifications

(ADA Compliant*, BAA Compliant, BABAA Compliant, BREEAM Materials Credit, EPD, HPD, IAPMO, LEED Credit, LEED HPD, LEED Water, Satisfies LEED Credits, cUPC Certified, WELL Building Standard)

Code 24531401

Downloads

- G2 and ECOS Single Flush Optima Plus Valve Installation Instructions
- SS:ST:SU:WETS:WEUS Fixtures Repair and Maintenance Guide
- Control Stop Repair and Maintenance Guide
- Additional Downloads

Videos

- Sloan – Company Overview

⚠ WARNING: Cancer and Reproductive Harm – www.P65Warnings.ca.gov

Sloan 10500 Seymour Ave, Franklin Park 800.982.5839 sloan.com

Details

- Flush Volume: 1.6 gpf (6 lpf)

Features

- Maximum static load rating of 1,000 lbs when installed on an appropriate wall carrier support system (not recommended for bariatric use)
- Automatically operates by means of an infrared sensor with multiple-focused, lobular sensing fields for high and low target detection
- User-friendly, three-second flush delay
- Adjustable tailpiece
- High copper, low zinc brass castings for dezincification resistance
- Available in low consumption (1.6 gpf/6.0 Lpf), water saver (3.5 gpf/13.2 Lpf), and high efficiency (1.28 gpf/4.8 Lpf) models
- Valve body, Cover, Tailpiece and Control Stop shall be in compliance with ASTM Alloy Classification for Semi-Red Brass
- Valve shall be in compliance to the applicable sections of ASSE 1037
- Designed to maximize and complement Sloan flushometers
- Universal model works with Sloan flushometers from 1.1 to 1.6 gpf
- Durable, hygienic vitreous china construction with elongated rim
- Syphon jet flushing achieves 1000g Map Scores when used with Sloan flushometers
- IAPMO certified to meet or exceed ASME A112.19.2 standards
- Meets ADA guidelines and ANSI A117.1 requirements when installed accordingly

Components

- Flushometer: Code 3250400
- Water Closet: Code 2102459

Warranty

View Warranty Information

Notes

All information contained within this document subject to change without notice.

*Compliant with ADA accessibility requirements when installed according to ADA standards.

Static load tested according to the procedure outlined in Section 6.7 of ASME A112.19.2. Not recommended for bariatric use.

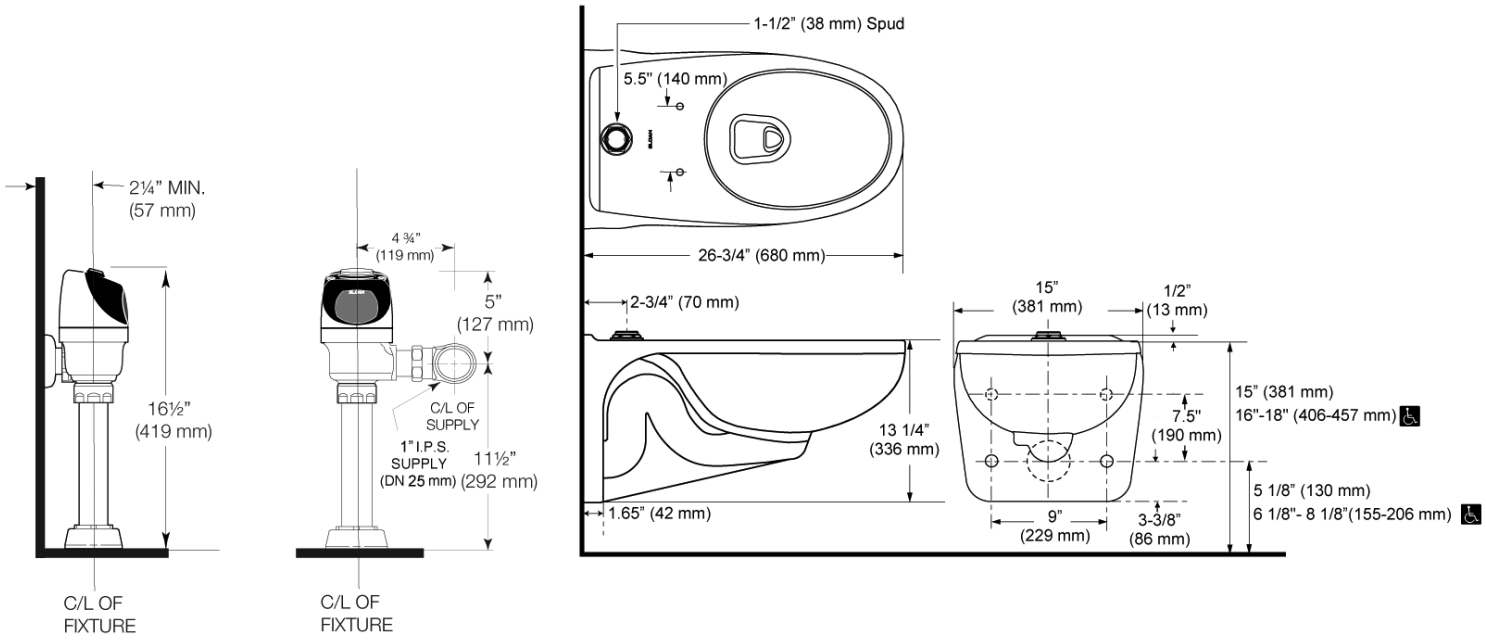
2¼" MIN.
(57 mm)
16½"
(419 mm)
C/L OF
FIXTURE
4 ¾"
(119 mm)
5"
(127 mm)
C/L OF
SUPPLY
1" I.P.S.
SUPPLY
(DN 25 mm)
11½"
(292 mm)
C/L OF
FIXTURE
1-1/2" (38 mm) Spud
5.5" (140 mm)
26-3/4" (680 mm)
2-3/4" (70 mm)
13 1/4"
(336 mm)
1.65" (42 mm)
15"
(381 mm)
1/2"
(13 mm)
7.5"
(190 mm)
9"
(229 mm)
3-3/8"
(86 mm)
15" (381 mm)
16"-18" (406-457 mm)
5 1/8" (130 mm)
6 1/8"- 8 1/8"(155-206 mm)