

Water Closet & Flushometer Combo

WETS-2450.1401-1.28-CP

Product description

1.28 gpf, Polished Chrome Finish, Fixture Connection Top Spud, Single Flush, Battery, ST-2459 Water Closet and G2 8111 Flushometer.

Compliances & Certifications

(ADA Compliant*, BAA Compliant, BABAA Compliant, BREEAM Materials Credit, BREEAM Water Credit, EPD, Green Globes Credit, Green Globes Water, HPD, LEED Credit, LEED HPD, LEED Water, Satisfies LEED Credits, EPA WaterSense Listed, WELL Building Standard)

Code 24501401

Downloads

- G2 and ECOS Single Flush Optima Plus Valve Installation Instructions
- SS:ST:SU:WETS:WEUS Fixtures Repair and Maintenance Guide
- Control Stop Repair and Maintenance Guide
- Additional Downloads

Videos

- Sloan – Company Overview

⚠ WARNING: Cancer and Reproductive Harm – www.P65Warnings.ca.gov

Sloan 10500 Seymour Ave, Franklin Park 800.982.5839 sloan.com

Details

- Flush Volume: 1.28 gpf (4.8 lpf)

Features

- Maximum static load rating of 1,000 lbs when installed on an appropriate wall carrier support system (not recommended for bariatric use)
- Automatically operates by means of an infrared sensor with multiple-focused, lobular sensing fields for high and low target detection
- User-friendly, three-second flush delay
- Adjustable tailpiece
- High copper, low zinc brass castings for dezincification resistance
- Available in low consumption (1.6 gpf/6.0 Lpf), water saver (3.5 gpf/13.2 Lpf), and high efficiency (1.28 gpf/4.8 Lpf) models
- Valve body, Cover, Tailpiece and Control Stop shall be in compliance with ASTM Alloy Classification for Semi-Red Brass
- Valve shall be in compliance to the applicable sections of ASSE 1037
- Designed to maximize and complement Sloan flushometers
- Universal model works with Sloan flushometers from 1.1 to 1.6 gpf
- Durable, hygienic vitreous china construction with elongated rim
- Syphon jet flushing achieves 1000g Map Scores when used with Sloan flushometers
- IAPMO certified to meet or exceed ASME A112.19.2 standards
- Meets ADA guidelines and ANSI A117.1 requirements when installed accordingly

Components

- Flushometer: Code 3250289
- Water Closet: Code 2102459

Warranty

View Warranty Information

Notes

All information contained within this document subject to change without notice.

*Compliant with ADA accessibility requirements when installed according to ADA standards.

Static load tested according to the procedure outlined in Section 6.7 of ASME A112.19.2. Not recommended for bariatric use.

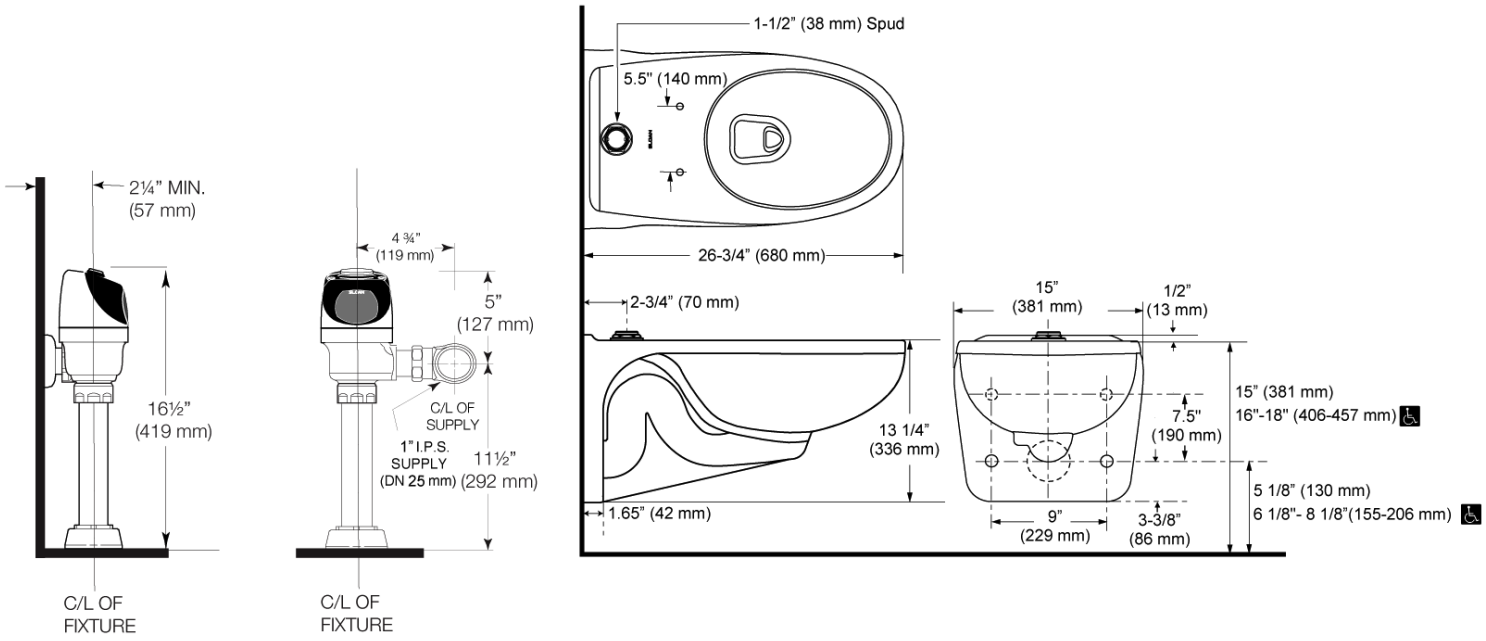
2¼" MIN.
(57 mm)
16½"
(419 mm)
C/L OF
FIXTURE
4 ¾"
(119 mm)
5"
(127 mm)
C/L OF
SUPPLY
1" I.P.S.
SUPPLY
(DN 25 mm)
11½"
(292 mm)
C/L OF
FIXTURE
1-1/2" (38 mm) Spud
5.5" (140 mm)
26-3/4" (680 mm)
2-3/4" (70 mm)
13 1/4"
(336 mm)
1.65" (42 mm)
15"
(381 mm)
1/2"
(13 mm)
7.5"
(190 mm)
9"
(229 mm)
3-3/8"
(86 mm)
15" (381 mm)
16"-18" (406-457 mm)
5 1/8" (130 mm)
6 1/8"- 8 1/8"(155-206 mm)