Vitreous China Oval Drop-In Lavatory

SS-3002

Product description

, Vitreous China Drop-In Lavatory.

Compliances & Certifications

(BREEAM Materials Credit, EPD, HPD, IAPMO, LEED Credit, LEED HPD, Satisfies LEED Credits, cUPC Certified)

Code 3873002

Downloads

- Sloan SS-3002 Installation Instructions.pdf
- SS-3002 Series Cutout Template - PDF.pdf
- SS:ST:SU:WETS:WEUS Fixtures Repair and Maintenance Guide.pdf
- Vitreous China Lavatories Repair and Maintenance Guide.pdf
- Sinks - Full Line Brochure.pdf
- Fixture Brochure.pdf
- Additional Downloads

Videos

- Sloan – Company Overview

WARNING: Cancer and Reproductive Harm – www.P65Warnings.ca.gov

Sloan 10500 Seymour Ave, Franklin Park 800.982.5839 sloan.com

Details

- Centerset: 4”
- Nominal Dimensions: 17” x 20” x 8” (432 x 508 x 203mm)
- Lavatory Type: Drop-In
- Shape: Oval

Features

- White, vitreous china drop-in, self-rimming lavatory
- Great complement to all of Sloan’s sensor faucet series
- Front overflow provides clean appearance
- All mounting hardware included
- IAPMO certified to meet or exceed ASME A112.19.2 standards
- Meets ADA guidelines and ANSI A117.1 requirements when installed accordingly

Warranty

View Warranty Information

Notes

All information contained within this document subject to change without notice.

All vitreous china dimensions shown in these drawings are nominal and not to scale. Dimensions can vary within the tolerances established in the governing ASME A112.19.2/CSA B45.1standard. It is important to consider this when planning rough-in and plumbing layouts.

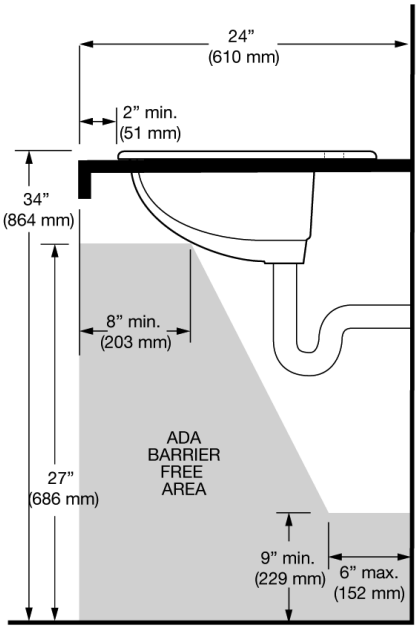
24”
(610 mm)
2” min.
(51 mm)
34”
(864 mm)
8” min.
(203 mm)
ADA
BARRIER
FREE
AREA
27”
(686 mm)
9” min.
(229 mm)
6” max.
(152 mm)

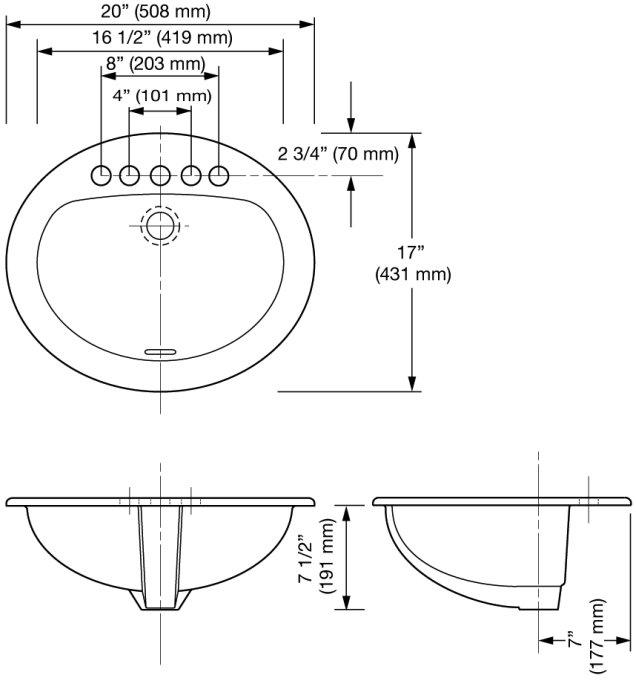
20” (508 mm)
16 1/2” (419 mm)
8” (203 mm)
4” (101 mm)
2 3/4” (70 mm)
17”
(431 mm)
7 1/2”
(191 mm)
7”
(177 mm)