

Elongated Floor-Mounted ADA Water Closet

ST-2029

Product description

Vitreous China Floor-Mounted ADA Water Closet.

Compliances & Certifications

(ADA Compliant*, BREEAM Materials Credit, CalGreen Compliant, CEC Compliant, EPD, Green Globes Credit, HPD, IAPMO, LEED Credit, LEED HPD, Satisfies LEED Credits, cUPC Certified, EPA WaterSense Listed, WELL Building Standard)

Code 2102029

Downloads

- HET Top Spud Installation Instructions
- SS:ST:SU:WETS:WEUS Fixtures Repair and Maintenance Guide
- Fixture Brochure
- Additional Downloads

Videos

- Sloan – Company Overview

⚠ WARNING: Cancer and Reproductive Harm – www.P65Warnings.ca.gov

Sloan 10500 Seymour Ave, Franklin Park 800.982.5839 sloan.com

Details

- Flush Volume: 1.1-1.6 gpf (4.2-6 lpf)
- RIM Height: 17.00” (432 mm)
- Nominal Dimensions: 26.75” x 14” x 17” (679 x 356 x 432mm)

Features

- Designed to maximize and complement Sloan flushometers
- Universal model works with Sloan flushometers from 1.1 to 1.6 gpf
- Durable, hygienic vitreous china construction with elongated rim
- Syphon jet flushing achieves 1000g Map Scores when used with Sloan flushometers
- IAPMO certified to meet or exceed ASME A112.19.2 standards
- Meets ADA guidelines and ANSI A117.1 requirements when installed accordingly

Recommended Seats

- Bemis - 1955CT/1955SSCT & 2155CT/2155SSCT
- Church - 295CT/295SSCT & 2155CT/2155SSCT

Plumbing System Requirements

- Minimum Flowing Pressure: 25 PSI (172 kPa)
- Maximum Static Pressure: 80 PSI (552 kPa)

Warranty

View Warranty Information

Notes

All information contained within this document subject to change without notice.

*Compliant with ADA accessibility requirements when installed according to ADA standards.
Static load tested according to the procedure outlined in Section 6.7 of ASME A112.19.2. Not recommended for bariatric use.@ AttributePlainHyperlinks:Find a compatible flushometer for this water closet
WaterSense compliant when used with a WaterSense compliant flushometer.

All vitreous china dimensions shown in these drawings are nominal and not to scale. Dimensions can vary within the tolerances established in the governing ASME A112.19.2/CSA B45.1 standard. It is important to consider this when planning rough-in and plumbing layouts.

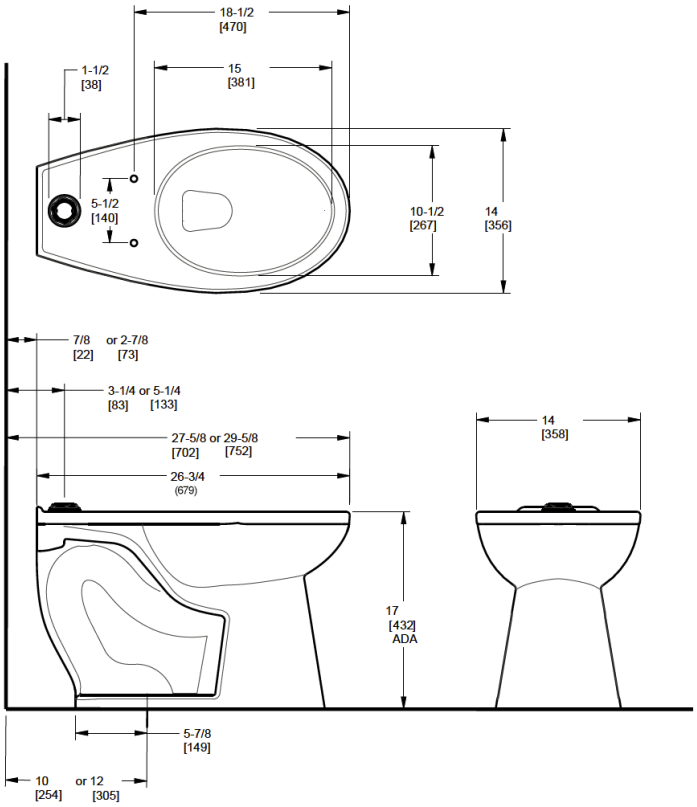
18-1/2
[470]
15
[381]
1-1/2
[38]
5-1/2
[140]
10-1/2
[267]
14
[356]
7/8 or 2-7/8
[22] [73]
3-1/4 or 5-1/4
[83] [133]
27-5/8 or 29-5/8
[702] [752]
26-3/4
(679)
14
[358]
17
[432]
ADA
5-7/8
[149]
10 or 12
[254] [305]