SOLIS® Sensor Specialty Flushometer

SOLIS BPW 8000-1.6-CP-1-1/2-OFST

Product description

1.6 gpf, Polished Chrome Finish, Fixture Connection Top Spud, Single Flush, 1.5” Offset, Electrical Override, Solar, SOLIS® Exposed Sensor Specialty Water Closet Bedpan Washer Flushometer.

Compliances & Certifications

(ADA Compliant*, BAA Compliant, IAPMO, UL Certified (US), cUPC Certified)

Code 3370070

Finish

Polished Chrome (CP)

Downloads

- BPW Exposed Installation Instructions.pdf
- Control Stop Repair and Maintenance Guide.pdf
- Flush Connections Flanges Repair and Maintenance Guide.pdf
- Additional Downloads

Videos

- Sloan – Company Overview

WARNING: Cancer and Reproductive Harm – www.P65Warnings.ca.gov

Sloan 10500 Seymour Ave, Franklin Park 800.982.5839 sloan.com

Details

- Flush Volume: 1.6 gpf (6.0 lpf)
- Finish: Polished Chrome (CP)
- Power Type: Solar
- Valve: Diaphragm
- Valve Body Material: Semi-red Brass
- Fixture Type: Water Closet
- Fixture Connection: Top Spud
- Rough-in Dimension: 34.375” (873mm)
- Spud Coupling: 1.5” (38mm)
- Supply Pipe: 1” (25mm)
- Override: Electrical
- Offset: 1.5” (38mm) (1-1/2-OFST)

Features

- Valve body, Cover, Tailpiece and Control Stop shall be in compliance with ASTM Alloy Classification for Semi-Red Brass
- Valve shall be in compliance to the applicable sections of ASSE 1037

Recommended specifications

Valve Body, Cover, Tailpiece and Control Stop shall be in conformance with ASTM Alloy Classification for Semi-Red Brass. Valve shall be in compliance with the applicable sections of ASSE 1037 and ANSI/ASME 112.19.2.

Valve Operating Pressure (Flowing)

15-80 psi (103 - 552 kPa). Specific fixtures may require greater minimum flowing pressure - consult manufacturer requirements.

Battery Specifications

Usage	4-AA Battery Service Life†			
	24 yrs	18 yrs	9 yrs	7.2 yrs
per month	500	1,000	3,000	4,000
per day	25	50	150	200

† Service life varies according to actual usage and restroom conditions
Battery shelf life: Alkaline= ~10 years - Lithium= ~25 years

Warranty

View Warranty Information

Notes

All information contained within this document subject to change without notice.

*Compliant with ADA accessibility requirements when installed according to ADA standards.

Looking for other variations of the SOLIS BPW 8000 product?
View the general spec sheet with all options.
Find a compatible urinal for this flushometer.
Find a compatible water closet for this flushometer.

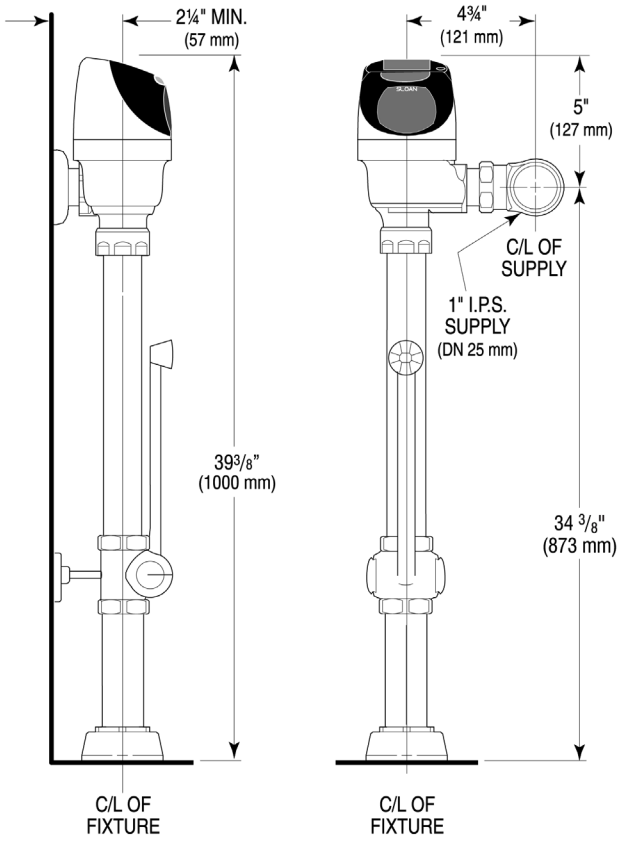
2¼" MIN.
(57 mm)
39 3/8"
(1000 mm)
C/L OF
FIXTURE
4¾"
(121 mm)
5"
(127 mm)
C/L OF
SUPPLY
1" I.P.S.
SUPPLY
(DN 25 mm)
34 3/8"
(873 mm)
C/L OF
FIXTURE