Vitreous China Wall-Mounted Lavatory

SS-3406

Product description

Standard, Vitreous China Wall-Mounted Ledgeback Lavatory.

Compliances & Certifications

(ADA Compliant*, cUPC Certified, IAPMO)

Code 3873406

Downloads

- Wall-Hung Ledgeback Lavatory with Optional Shroud Installation.pdf
- Fixture Brochure.pdf
- Additional Downloads

Videos

- Sloan – Company Overview

WARNING: Cancer and Reproductive Harm – www.P65Warnings.ca.gov

Sloan 10500 Seymour Ave, Franklin Park 800.982.5839 sloan.com

Details

- Centerset: 4”
- Nominal Dimensions: 18.25” x 20” x 7.25” (464 x 508 x 184mm)
- Lavatory Type: Wall-Mounted

Features

- White, vitreous china wall hung lavatory with ledgeback
- Great complement to all of Sloan’s sensor faucet series
- Front overflow provides clean appearance
- All mounting hardware included
- IAPMO certified to meet or exceed ASME A112.19.2 standards
- Optional ceramic shroud available

Warranty

View Warranty Information

Notes

All information contained within this document subject to change without notice.

*Compliant with ADA accessibility requirements when installed according to ADA standards.

All vitreous china dimensions shown in these drawings are nominal and not to scale. Dimensions can vary within the tolerances established in the governing ASME A112.19.2/CSA B45.1standard. It is important to consider this when planning rough-in and plumbing layouts.

Lavatory does not meet ADA requirements when optional ceramic shroud is used.

Rough-in and line drawing
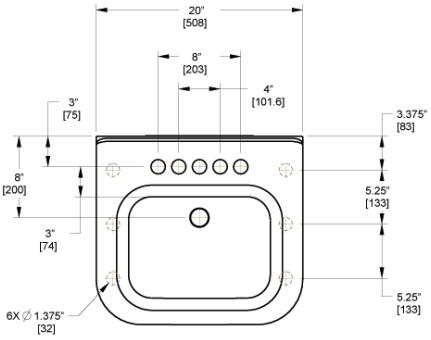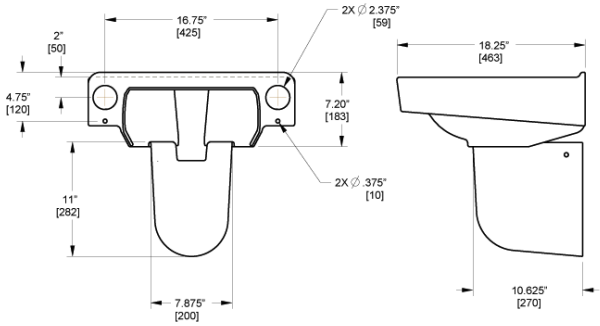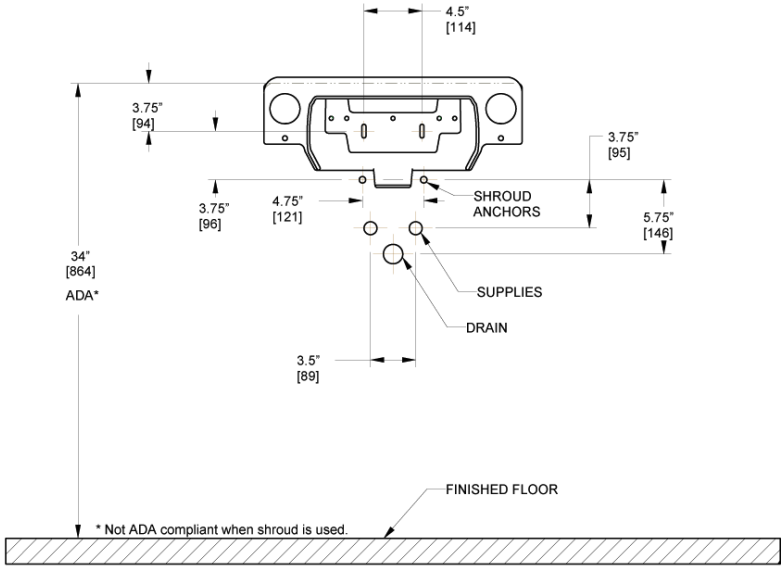
SS-3406