Sloan® Manual Specialty Flushometer

SLOAN WES BPW 1000-1.6-CP

Product description

1.6 gpf, Polished Chrome Finish, Fixture Connection Top Spud, Single Flush, 12” Bedpan Spray Arm, Sloan® Exposed Manual Specialty Water Closet Bedpan Washer Flushometer.

Compliances & Certifications

(ADA Compliant*, BAA Compliant, IAPMO, cUPC Certified)

Code 3760020

Finish

Polished Chrome (CP)

Downloads

- BPW Exposed Installation Instructions.pdf
- UPPERCUT Installation Instructions.pdf
- Control Stop Repair and Maintenance Guide.pdf
- Flush Connections Flanges Repair and Maintenance Guide.pdf
- Tail Piece Repair and Maintenance Guide.pdf
- Retrofits Brochure.pdf
- Additional Downloads

Videos

- Sloan – Company Overview

WARNING: Cancer and Reproductive Harm – www.P65Warnings.ca.gov

Sloan 10500 Seymour Ave, Franklin Park 800.982.5839 sloan.com

Details

- Flush Volume: 1.6 gpf (6.0 lpf)
- Finish: Polished Chrome (CP)
- Valve: Diaphragm
- Valve Body Material: Semi-red Brass
- Fixture Type: Water Closet
- Fixture Connection: Top Spud
- Rough-in Dimension: 34.375” (873mm)
- Spud Coupling: 1.5” (38mm)
- Supply Pipe: 1” (25mm)

Features

- High chloramine resistant PERMEX®synthetic rubber diaphragm with Linear Filtered Bypass and Vortex Cleansing Action
- Valve body, Cover, Tailpiece and Control Stop shall be in compliance with ASTM Alloy Classification for Semi-Red Brass
- Valve shall be in compliance to the applicable sections of ASSE 1037

Recommended specifications

Valve Body, Cover, Tailpiece and Control Stop shall be in conformance with ASTM Alloy Classification for Semi-Red Brass. Valve shall be in compliance with the applicable sections of ASSE 1037 and ANSI/ASME 112.19.2.

Valve Operating Pressure (Flowing)

15-80 psi (103 - 552 kPa). Specific fixtures may require greater minimum flowing pressure - consult manufacturer requirements.

Warranty

View Warranty Information

Notes

All information contained within this document subject to change without notice.

*Compliant with ADA accessibility requirements when installed according to ADA standards.

Looking for other variations of the SLOAN WES BPW 1000 product? View the general spec sheet with all options.
Find a compatible urinal for this flushometer.
Find a compatible water closet for this flushometer.

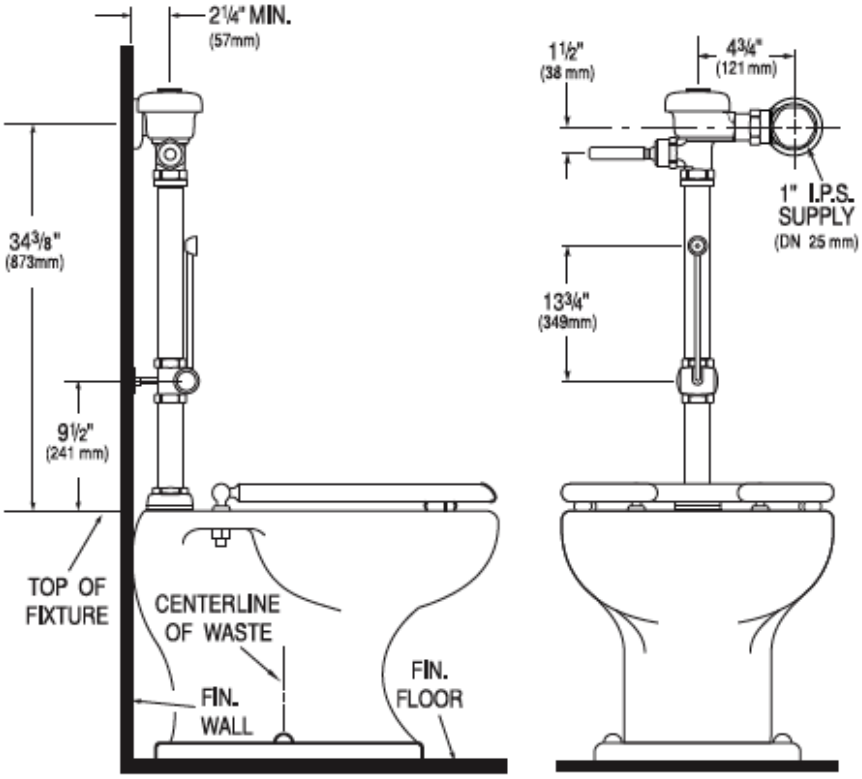
2¼" MIN.
(57mm)
34⅜"
(873mm)
9½"
(241 mm)
TOP OF
FIXTURE
CENTERLINE
OF WASTE
FIN.
WALL
FIN.
FLOOR
1½"
(38 mm)
4¾"
(121 mm)
1" I.P.S.
SUPPLY
(DN 25 mm)
13¾"
(349mm)