Urinal & Flushometer Combo

WEUS-1005.1402-0.5-CP

Product description

0.5 gpf, Polished Chrome Finish, 0.75” Flush Connection, Fixture Connection Top Spud, Single Flush, 0.75” Inlet, 3/4” Control Stop, Electrical Override, Battery, Infrared, SU-1009 Urinal and ROYAL 186 SMO Flushometer.

Compliances & Certifications

(ADA Compliant*, BAA Compliant, BABAA Compliant, BREEAM Water Credit, cUPC Green Certified, EPD, Green Globes Water, HPD, IAPMO, LEED Water, Satisfies LEED Credits, EPA WaterSense Listed, WELL Building Standard)

Code 10051402

Downloads

- Standard Spud Urinal Installation Instructions.pdf
- Optima SMO Installation Instructions.pdf
- Royal Exposed Installation Instructions.pdf
- SS:ST:SU:WETS:WEUS Fixtures Repair and Maintenance Guide.pdf
- Royal Manual Diaphragm Flushometer Repair and Maintenance Guide.pdf
- Fixture Brochure.pdf
- Additional Downloads

Videos

- Sloan – Company Overview

WARNING: Cancer and Reproductive Harm – www.P65Warnings.ca.gov

Sloan 10500 Seymour Ave, Franklin Park 800.982.5839 sloan.com

Details

- Flush Volume: 0.5 gpf (1.9 lpf)

Features

- Complete urinal system including Royal flushometer Designed to maximize performance
- Thorough washdown flushing action
- Durable, hygienic vitreous china construction
- Vandal resistant stainless steel strainer included
- IAPMO certified to meet or exceed ASME A112.19.2 standards
- Water Sense listed by EPA that qualifies for most rebate programs
- Meets ADA guidelines and ANSI A117.1 requirements when installed accordingly

Components

- Flushometer: Code 3912679
- Urinal: Code 1101009

Warranty

View Warranty Information

Notes

All information contained within this document subject to change without notice.

*Compliant with ADA accessibility requirements when installed according to ADA standards.

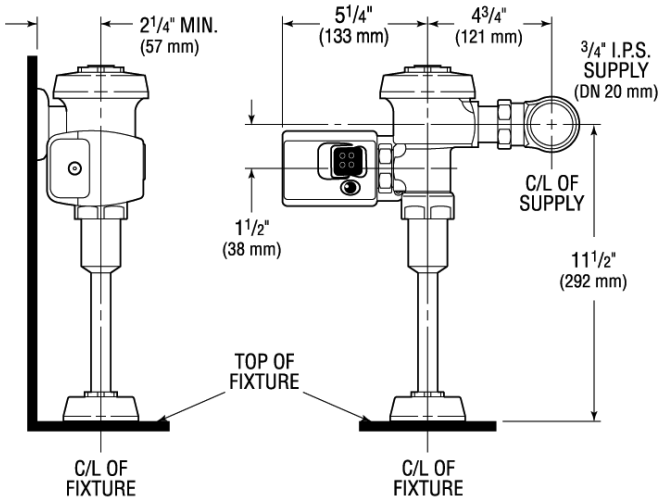
2 1/4" MIN.
(57 mm)
5 1/4"
(133 mm)
4 3/4"
(121 mm)
3/4" I.P.S.
SUPPLY
(DN 20 mm)
C/L OF
SUPPLY
1 1/2"
(38 mm)
11 1/2"
(292 mm)
TOP OF
FIXTURE
C/L OF
FIXTURE
C/L OF
FIXTURE

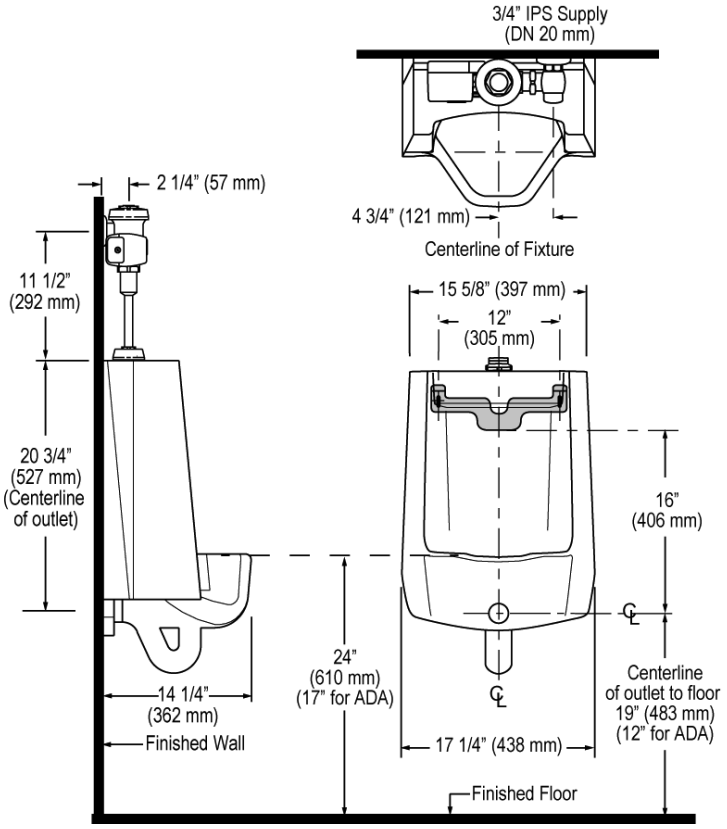
3/4" IPS Supply
(DN 20 mm)
2 1/4" (57 mm)
4 3/4" (121 mm)
Centerline of Fixture
11 1/2"
(292 mm)
15 5/8" (397 mm)
12"
(305 mm)
20 3/4"
(527 mm)
(Centerline
of outlet)
16"
(406 mm)
24"
(610 mm)
(17" for ADA)
14 1/4"
(362 mm)
Finished Wall
17 1/4" (438 mm)
Centerline
of outlet to floor
19" (483 mm)
(12" for ADA)
Finished Floor