Urinal & Flushometer Combo

WEUS-1205.1410-0.5-CP

Product description

0.5 gpf, Polished Chrome Finish, 0.75” Flush Connection, Fixture Connection Top Spud, Single Flush, 0.75” Inlet, 3/4” Control Stop, Electrical Override, Battery, Infrared, SU-1205 Urinal and ECOS 8186 Flushometer.

Compliances & Certifications

(ADA Compliant*, BREEAM Water Credit, EPD, Green Globes Water, HPD, IAPMO, LEED Credit, LEED HPD, LEED Water, Satisfies LEED Credits, EPA WaterSense Listed, WELL Building Standard)

Code 12051410

Downloads

- Standard Spud Urinal Installation Instructions.pdf
- ECOS Hardwire Installation Instructions.pdf
- SS:ST:SU:WETS:WEUS Fixtures Repair and Maintenance Guide.pdf
- ECOS Repair and Maintenance Guide.pdf
- Fixture Brochure.pdf
- Additional Downloads

Videos

- Sloan – Company Overview

WARNING: Cancer and Reproductive Harm – www.P65Warnings.ca.gov

Sloan 10500 Seymour Ave, Franklin Park 800.982.5839 sloan.com

Details

- Flush Volume: 0.5 gpf (1.9 lpf)

Features

- Complete urinal system including ECOS flushometer Designed to maximize performance
- Thorough washdown flushing action
- Durable, hygienic vitreous china construction
- Vandal resistant stainless steel strainer included
- IAPMO certified to meet or exceed ASME A112.19.2 standards
- Water Sense listed by EPA that qualifies for most rebate programs
- Meets ADA guidelines and ANSI A117.1 requirements when installed accordingly

Components

- Flushometer: Code 3370430
- Urinal: Code

Warranty

View Warranty Information

Notes

All information contained within this document subject to change without notice.

*Compliant with ADA accessibility requirements when installed according to ADA standards.

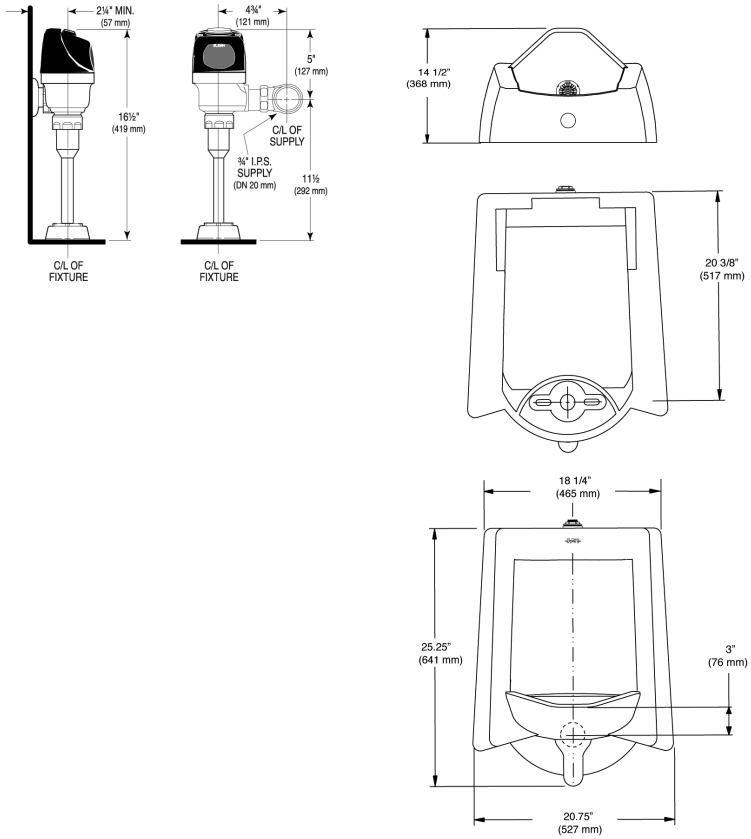
2¼" MIN.
(57 mm)
16½"
(419 mm)
C/L OF
FIXTURE
4¾"
(121 mm)
5"
(127 mm)
C/L OF
SUPPLY
¾" I.P.S.
SUPPLY
(DN 20 mm)
11½
(292 mm)
C/L OF
FIXTURE
14 1/2"
(368 mm)
20 3/8"
(517 mm)
18 1/4"
(465 mm)
25.25"
(641 mm)
3"
(76 mm)
20.75"
(527 mm)