Sloan® Manual Flushometer

SLOAN 195-0.5-RB-WB-2-3/4-LDIM-L

Product description

0.5 gpf, Rough Brass Finish, Fixture Connection Rear Spud, Single Flush, 2.75” L Dimension, Metal Index Push Button, Standard size (WB-1-A wall box not included- order separately) Wall Box, Sloan® Concealed Manual Urinal Flushometer.

Compliances & Certifications

(BAA Compliant, BREEAM Water Credit, Green Globes Water, IAPMO, LEED Water, Made in the USA, Satisfies LEED Credits, cUPC Certified, EPA WaterSense Listed)

Code 3783209

Finish

Rough Brass (RB)

Downloads

- Sloan Concealed Installation Instructions.pdf
- Control Stop Repair and Maintenance Guide.pdf
- Flush Connections Flanges Repair and Maintenance Guide.pdf
- Additional Downloads

Videos

- Sloan – Company Overview

WARNING: Cancer and Reproductive Harm – www.P65Warnings.ca.gov

Sloan 10500 Seymour Ave, Franklin Park 800.982.5839 sloan.com

Details

- Flush Volume: 0.5 gpf (1.9 lpf)
- Finish: Rough Brass (RB)
- Valve: Diaphragm
- Valve Body Material: Semi-red Brass
- Fixture Type: Urinal
- Fixture Connection: Rear Spud
- Rough-in Dimension: 13.5” (343mm)
- Spud Coupling: 0.75” (19mm)
- Supply Pipe: 0.75” (19mm)
- L Dimension: 2.75” (70mm) (2-3/4-LDIM)
- Wall Box: Standard size (WB-1-A wall box not included- order separately) (undefined)
- Push Button: Metal Index (L)

Features

- Flush volumes start as low as 0.125 gpf/0.5 Lpf
- Water conservation is aided by the ADA-compliant, non-hold-open handle, which prevents urinal from exceeding intended flush volume
- Low-consumption flush accuracy also enhances water efficiency
- Durability is facilitated with high copper, low zinc brass castings for dezincification resistance
- Adjustable tailpiece to accommodate different height requirements
- High chloramine resistant PERMEX® Synthetic Rubber Diaphragm with Linear Filtered Bypass and Vortex Cleansing Action
- Valve body, Cover, Tailpiece and Control Stop shall be in compliance with ASTM Alloy Classification for Semi-Red Brass
- Valve shall be in compliance to the applicable sections of ASSE 1037

Recommended specifications

Valve Body, Cover, Tailpiece and Control Stop shall be in conformance with ASTM Alloy Classification for Semi-Red Brass. Valve shall be in compliance with the applicable sections of ASSE 1037 and ANSI/ASME 112.19.2.

Valve Operating Pressure (Flowing)

15-80 psi (103 - 552 kPa). Specific fixtures may require greater minimum flowing pressure - consult manufacturer requirements.

Warranty

View Warranty Information

Notes

All information contained within this document subject to change without notice.

WaterSense compliant when used with a 0.5 gpf (1.9 lpf) WaterSense fixture.

Looking for other variations of the SLOAN 195 product? View the general spec sheet with all options.
Find a compatible urinal for this flushometer.
Find a compatible water closet for this flushometer.

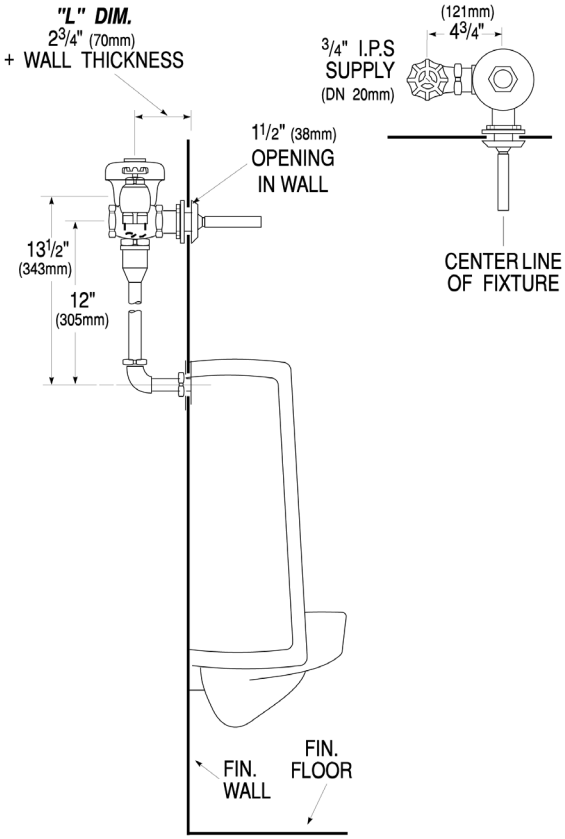
"L" DIM.
2 3/4" (70mm)
+ WALL THICKNESS
1 1/2" (38mm)
OPENING
IN WALL
13 1/2"
(343mm)
12"
(305mm)
FIN.
WALL
FIN.
FLOOR
(121mm)
4 3/4"
3/4" I.P.S
SUPPLY
(DN 20mm)
CENTER LINE
OF FIXTURE