Urinal & Flushometer Combo

WEUS-7006.1402-1.0-CP

Product description

1.0 gpf, Polished Chrome Finish, 0.75” Flush Connection, Fixture Connection Top Spud, Single Flush, 0.75” Inlet, 3/4” Control Stop, Electrical Override, Battery, Infrared, SU-7006 Urinal and ROYAL 186 SMO Flushometer.

Compliances & Certifications

(ADA Compliant*, EPD, HPD, IAPMO, cUPC Certified, WELL Building Standard)

Code 70061402

Downloads

- Small Spud Urinal Installation Instructions.pdf
- Optima SMO Installation Instructions.pdf
- SS:ST:SU:WETS:WEUS Fixtures Repair and Maintenance Guide.pdf
- Fixture Brochure.pdf
- Additional Downloads

Videos

- Sloan – Company Overview

WARNING: Cancer and Reproductive Harm – www.P65Warnings.ca.gov

Sloan 10500 Seymour Ave, Franklin Park 800.982.5839 sloan.com

Details

- Flush Volume: 1.0 gpf (3.8 lpf)

Features

- Complete urinal system including Royal flushometer Designed to maximize performance
- Thorough washdown flushing action
- Durable, hygienic vitreous china construction
- Vandal resistant stainless steel strainer included
- IAPMO certified to meet or exceed ASME A112.19.2 standards
- Meets ADA guidelines and ANSI A117.1 requirements when installed accordingly

Components

- Flushometer: Code 3912707
- Urinal: Code

Warranty

View Warranty Information

Notes

All information contained within this document subject to change without notice.

*Compliant with ADA accessibility requirements when installed according to ADA standards.

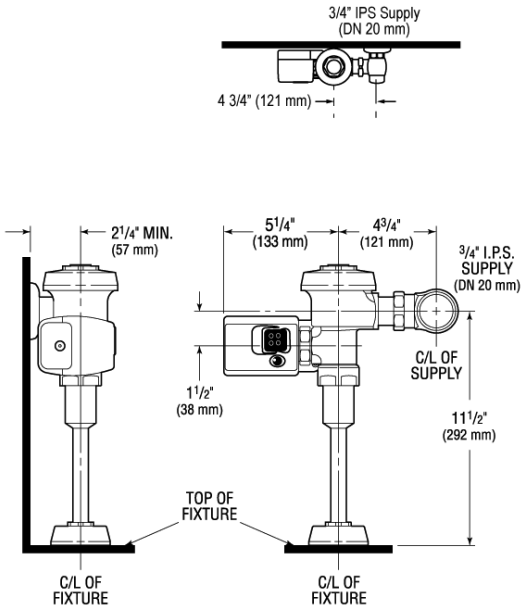
3/4" IPS Supply
(DN 20 mm)
4 3/4" (121 mm)
2 1/4" MIN.
(57 mm)
5 1/4"
(133 mm)
4 3/4"
(121 mm)
3/4" I.P.S.
SUPPLY
(DN 20 mm)
C/L OF
SUPPLY
1 1/2"
(38 mm)
11 1/2"
(292 mm)
TOP OF
FIXTURE
C/L OF
FIXTURE
C/L OF
FIXTURE

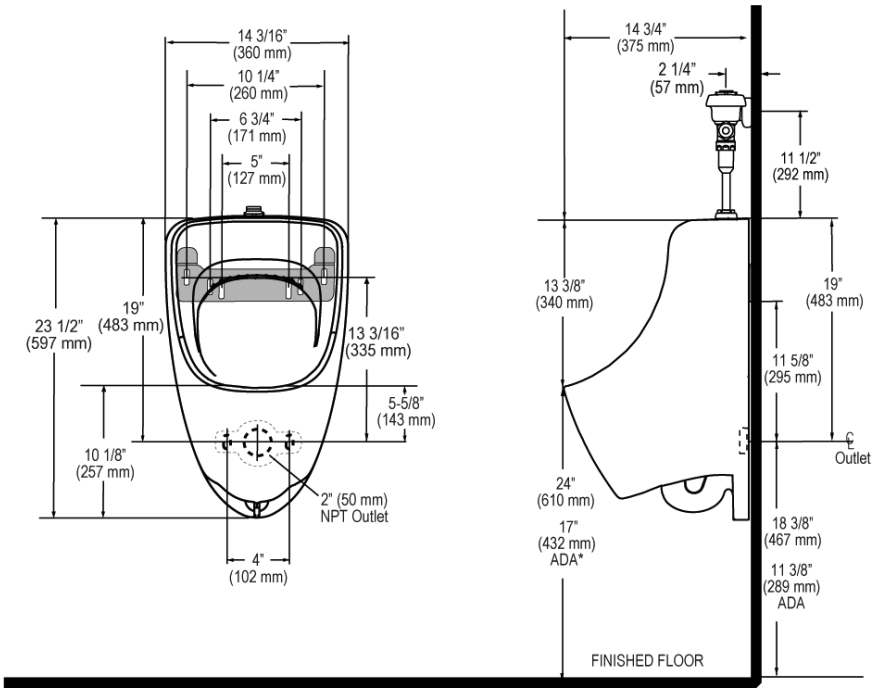
14 3/16"
(360 mm)
10 1/4"
(260 mm)
6 3/4"
(171 mm)
5"
(127 mm)
23 1/2"
(597 mm)
19"
(483 mm)
13 3/16"
(335 mm)
5-5/8"
(143 mm)
10 1/8"
(257 mm)
2" (50 mm)
NPT Outlet
4"
(102 mm)
14 3/4"
(375 mm)
2 1/4"
(57 mm)
11 1/2"
(292 mm)
13 3/8"
(340 mm)
19"
(483 mm)
11 5/8"
(295 mm)
℄
Outlet
24"
(610 mm)
17"
(432 mm)
ADA*
18 3/8"
(467 mm)
11 3/8"
(289 mm)
ADA
FINISHED FLOOR