Variation Not Shown: Wall Box, 1.5” Flush Connection

Royal® Sensor Flushometer

ROYAL 190 ESS-1.5-BSS-U-L/OR-WB ESS-HW-24V

Product description

1.5 gpf, Stainless Steel Finish, 1.25” Flush Connection, Fixture Connection Rear Spud, Single Flush, 2”-10.75” L Dimension, Less Override, Hardwired, Sensor-Operated, 24V, Wall Box with 13” x 17” Stainless Steel Access Panel Wall Box, Royal® Concealed Sensor Hardwired Urinal Flushometer.

Compliances & Certifications

(ADA Compliant*, BAA Compliant, IAPMO, UL Certified (US), cUPC Certified)

Code 3453047

Finish

Stainless Steel (BSS)

Downloads

- Royal ESS Concealed with Wall Box Installation Instructions.pdf
- Royal ESS Concealed and Exposed Installation Instructions.pdf
- Control Stop Repair and Maintenance Guide.pdf
- Flush Connections Flanges Repair and Maintenance Guide.pdf
- Tail Piece Repair and Maintenance Guide.pdf
- Retrofits Brochure.pdf
- Additional Downloads

Videos

- ESS Flushometer

WARNING: Cancer and Reproductive Harm – www.P65Warnings.ca.gov

Sloan 10500 Seymour Ave, Franklin Park 800.982.5839 sloan.com

Details

- Flush Volume: 1.5 gpf (5.7 lpf)
- Finish: Stainless Steel (BSS)
- Power Type: Hardwired (HW)
- Valve: Diaphragm
- Valve Body Material: Semi-red Brass
- Fixture Type: Urinal
- Fixture Connection: Rear Spud
- Rough-in Dimension: 14.5" (368mm)
- Spud Coupling: 1.25" (32mm)
- Supply Pipe: 1" (25mm)
- L Dimension: 2"-10.75" (51-273mm)
- Override: Less (L/OR)
- Wall Box: Wall Box with 13" x 17" Stainless Steel Access Panel (WB ESS)
- Flush Connection: 1.25" (32mm) (U)
- Voltage: 24V (24V)

Features

- Flush volumes start as low as a pint of water
- Water conservation is aided by the ADA-compliant, non-hold-open handle, which prevents urinal from exceeding intended flush volume
- Flush accuracy is controlled by CID™ technology, also enhancing water efficiency
- Durability is facilitated with high copper, low zinc brass castings for dezincification resistance
- Adjustable tailpiece
- PERMEX® Synthetic Rubber Diaphragm with Dual Filtered Fixed Bypass
- Valve body, Cover, Tailpiece and Control Stop shall be in compliance with ASTM Alloy Classification for Semi-Red Brass
- Valve shall be in compliance to the applicable sections of ASSE 1037
- If the valve is an ESS WB, the 13 x 17 wall box is included If it's a manual valve WB variation, then the wall box needs to be ordered separately

Recommended specifications

Valve Body, Cover, Tailpiece and Control Stop shall be in conformance with ASTM Alloy Classification for Semi-Red Brass. Valve shall be in compliance with the applicable sections of ASSE 1037 and ANSI/ASME 112.19.2.

Electrical specifications

- Arming Delay: 8 seconds
- Control Circuit:
  - Solid State
  - 24 VAC Input
  - 24 VAC Output
- Flush Delay: 1 seconds
- Sensor Range: 15"-30" (381 - 762mm)
- Self-Adaptive Window: ±8"
- Solenoid Operator: 24 VAC
- Transformers (Specify Separately):
  - EL-154/0345154
  - EL-342/0345999

Valve Operating Pressure (Flowing)

15-80 psi (103 - 552 kPa). Specific fixtures may require greater minimum flowing pressure - consult manufacturer requirements.

Warranty

View Warranty Information

Notes

All information contained within this document subject to change without notice.

*Compliant with ADA accessibility requirements when installed according to ADA standards.

Looking for other variations of the ROYAL 190 ESS product?
View the general spec sheet with all options.
Find a compatible urinal for this flushometer.
Find a compatible water closet for this flushometer.
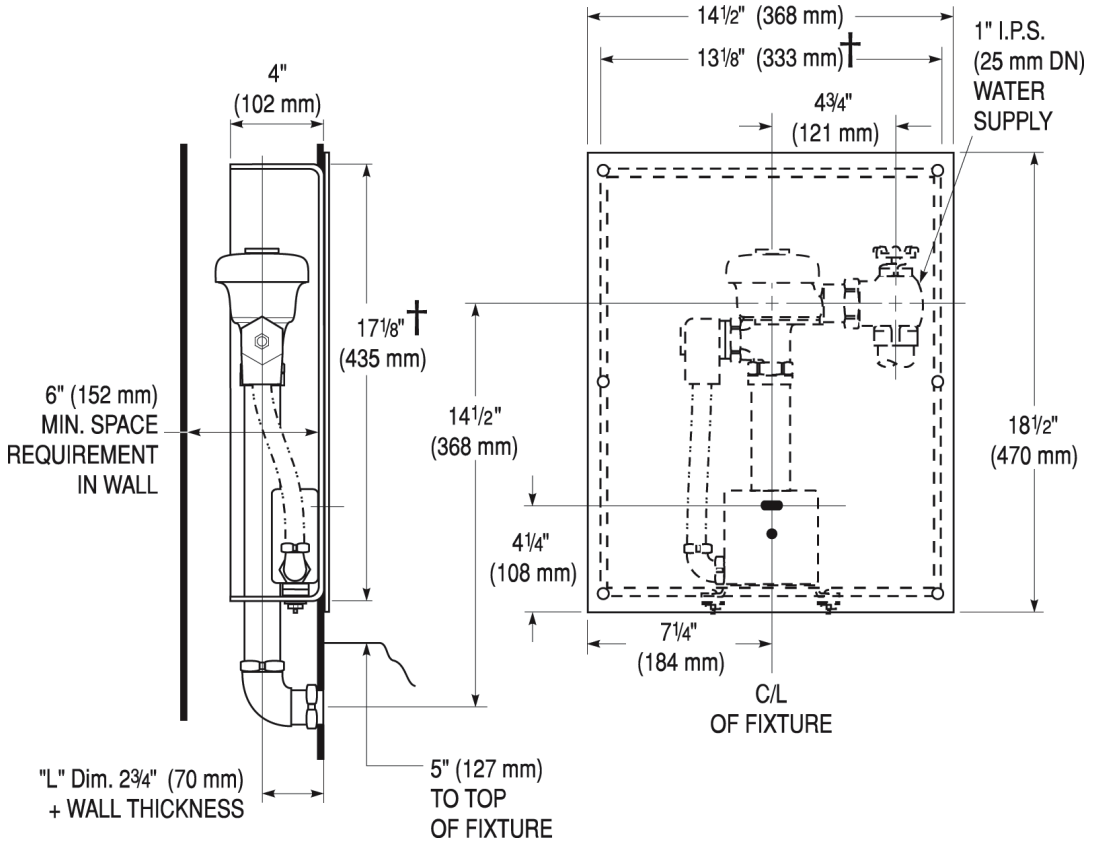
Rough-in and line drawing ROYAL 190 ESS-1.5-BSS-U-L/OR-WB ESS-HW-24V