Vitreous China Wall-Mounted Lavatory

SS-3865-CN

Product description

Carbon Neutral, Vitreous China Wall-Mounted Lavatory.

Compliances & Certifications

(ADA Compliant*, Carbon Neutral^, IAPMO, cUPC Certified)

Code 3873865T

Downloads

- SS-3X65 Installation Instructions.pdf
- Vitreous China Lavatories Repair and Maintenance Guide.pdf
- Sinks - Full Line Brochure.pdf
- Additional Downloads

Videos

- Sloan – Company Overview

WARNING: Cancer and Reproductive Harm – www.P65Warnings.ca.gov

Sloan 10500 Seymour Ave, Franklin Park 800.982.5839 sloan.com

Details

- Centerset: 8”
- Nominal Dimensions: 20.5” x 21.5” x 5.75” (521 x 546 x 146mm)
- Lavatory Type: Wall-Mounted

Features

- White, vitreous china wall hung lavatory with rear overflow
- Great complement to all of Sloan’s sensor faucet series
- IAPMO certified to meet or exceed ASME A112.19.2 standards
- Meets ADA guidelines and ANSI A117.1 requirements when installed accordingly

Warranty

View Warranty Information

Notes

All information contained within this document subject to change without notice.

*Compliant with ADA accessibility requirements when installed according to ADA standards.
^To obtain the certificate for your carbon-neutral products, please reach out to Sloan’s customer support:customer.service@sloan.com.

All vitreous china dimensions shown in these drawings are nominal and not to scale. Dimensions can vary within the tolerances established in the governing ASME A112.19.2/CSA B45.1standard. It is important to consider this when planning rough-in and plumbing layouts.

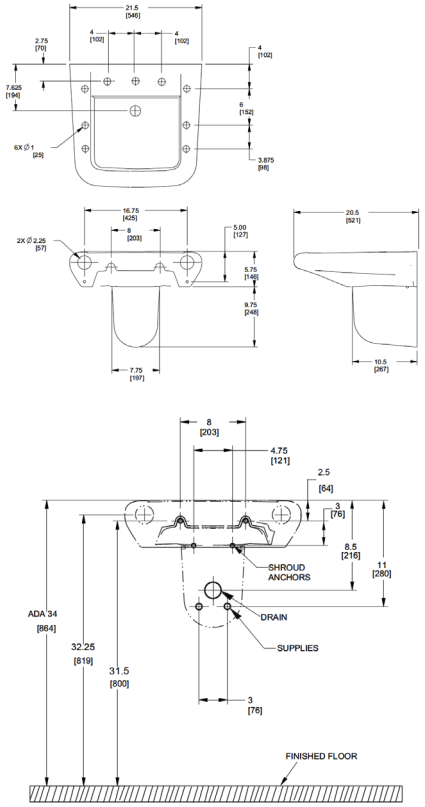
21.5
[546]
4
[102]
4
[102]
2.75
[70]
4
[102]
7.625
[194]
6
[152]
6X Ø 1
[25]
3.875
[98]
16.75
[425]
8
[203]
5.00
[127]
2X Ø 2.25
[57]
5.75
[146]
9.75
[248]
7.75
[197]
20.5
[521]
10.5
[267]
8
[203]
4.75
[121]
2.5
[64]
3
[76]
8.5
[216]
11
[280]
SHROUD
ANCHORS
ADA 34
[864]
DRAIN
SUPPLIES
32.25
[819]
31.5
[800]
3
[76]
FINISHED FLOOR