Vitreous China Oval Drop-In Lavatory

Product description

Carbon Neutral, Vitreous China Drop-In Lavatory.

Compliances & Certifications

(Carbon Neutral^, IAPMO, cUPC Certified)

Code 3873802T

Downloads

- SS-3002 Series Cutout Template - PDF.pdf
- SS:ST:SU:WETS:WEUS Fixtures Repair and Maintenance Guide.pdf
- Sinks - Full Line Brochure.pdf
- Fixture Brochure.pdf
- Additional Downloads

Videos

- Sloan – Company Overview

WARNING: Cancer and Reproductive Harm – www.P65Warnings.ca.gov

Sloan 10500 Seymour Ave, Franklin Park 800.982.5839 sloan.com

Product Information

Details

- Centerset: 8”
- Nominal Dimensions: 17” x 20” x 8” (432 x 508 x 203mm)
- Lavatory Type: Drop-In
- Shape: Oval

Features

- White, vitreous china drop-in, self-rimming lavatory
- Great complement to all of Sloan’s sensor faucet series
- Front overflow provides clean appearance
- All mounting hardware included
- IAPMO certified to meet or exceed ASME A112.19.2 standards
- Meets ADA guidelines and ANSI A117.1 requirements when installed accordingly

Warranty

View Warranty Information

Notes

All information contained within this document subject to change without notice.

^To obtain the certificate for your carbon-neutral products, please reach out to Sloan’s customer support:customer.service@sloan.com.

All vitreous china dimensions shown in these drawings are nominal and not to scale. Dimensions can vary within the tolerances established in the governing ASME A112.19.2/CSA B45.1standard. It is important to consider this when planning rough-in and plumbing layouts.
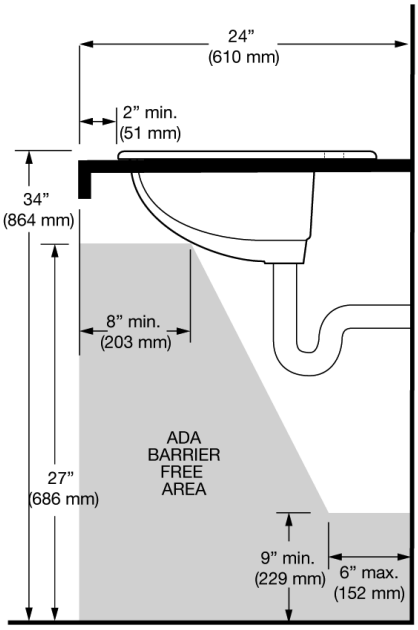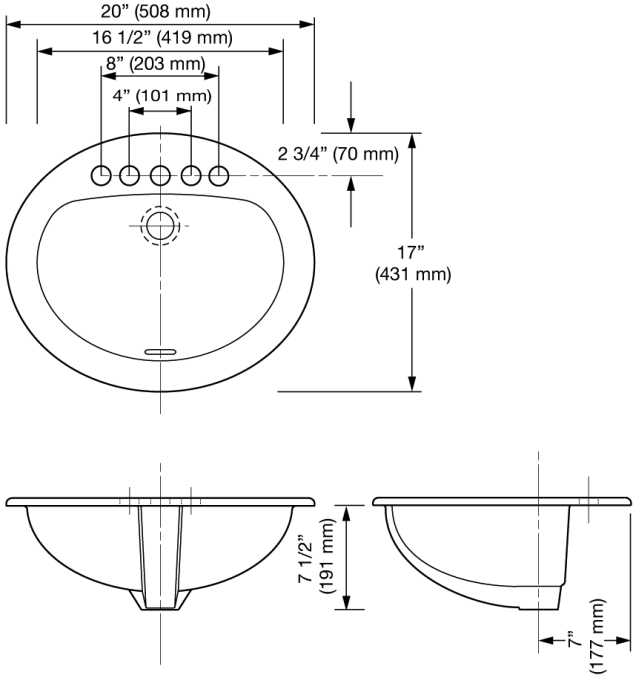
Rough-in and line drawing