Urinal & Flushometer Combo

WEUS-1200.1010-0.125-CP

Product description

0.125 gpf, Dual-Filtered Bypass, Polished Chrome Finish, Fixture Connection Top Spud, Single Flush, SU-1209 Urinal and SLOAN 186 Flushometer.

Compliances & Certifications

(ADA Compliant*, BREEAM Water Credit, CalGreen Compliant, cUPC Green Certified, EPD, Green Globes Water, HPD, IAPMO, LEED Credit, LEED HPD, LEED Water, Satisfies LEED Credits, EPA WaterSense Listed, WELL Building Standard)

Code 12001010

Downloads

- Retrofit Urinal Installation Instructions.pdf
- Sloan Exposed Installation Instructions.pdf
- SS:ST:SU:WETS:WEUS Fixtures Repair and Maintenance Guide.pdf
- Fixture Brochure.pdf
- Additional Downloads

Videos

- Sloan – Company Overview

WARNING: Cancer and Reproductive Harm – www.P65Warnings.ca.gov

Sloan 10500 Seymour Ave, Franklin Park 800.982.5839 sloan.com

Details

- Flush Volume: 0.125 gpf (0.5 lpf)

Features

- Complete urinal system including Sloan flushometer Designed to maximize performance
- Thorough washdown flushing action
- Durable, hygienic vitreous china construction
- Vandal resistant stainless steel strainer included
- IAPMO certified to meet or exceed ASME A112.19.2 standards
- Water Sense listed by EPA that qualifies for most rebate programs
- Meets ADA guidelines and ANSI A117.1 requirements when installed accordingly

Components

- Flushometer: Code 3782643
- Urinal: Code 1101209

Warranty

View Warranty Information

Notes

All information contained within this document subject to change without notice.

*Compliant with ADA accessibility requirements when installed according to ADA standards.

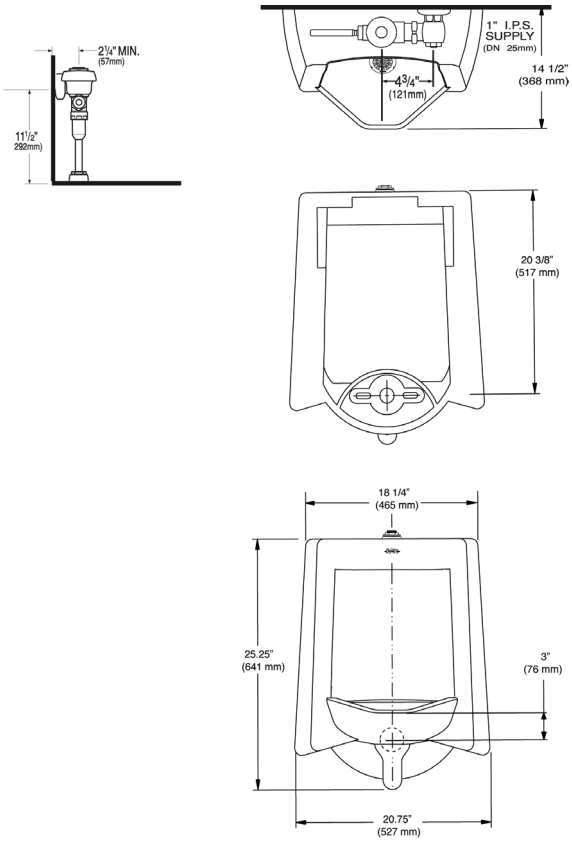
2¼" MIN.
(57mm)
11½"
292mm)
1" I.P.S.
SUPPLY
(DN 25mm)
14 1/2"
(368 mm)
4¾"
(121mm)
20 3/8"
(517 mm)
18 1/4"
(465 mm)
25.25"
(641 mm)
3"
(76 mm)
20.75"
(527 mm)