Royal® Sensor Flushometer

ROYAL 186 SMOOTH-0.5-CP-TMO-HW

Product description

0.5 gpf, Polished Chrome Finish, Fixture Connection Top Spud, Single Flush, True Mechanical Override, Hardwired, Royal® Exposed Sensor Urinal Flushometer.

Compliances & Certifications

(ADA Compliant*, BAA Compliant, BABAA Compliant, BREEAM Water Credit, Green Globes Water, IAPMO, LEED Water, Satisfies LEED Credits, UL Certified (US and Canada), EPA WaterSense Listed)

Code 3912716

Finish

Polished Chrome (CP)

Downloads

- EL 600-A Installation Instructions.pdf
- EBV 200 Smooth Installation Instructions.pdf
- Royal Exposed Installation Instructions.pdf
- Control Stop Repair and Maintenance Guide.pdf
- Flush Connections Flanges Repair and Maintenance Guide.pdf
- Flushometers Brochure.pdf
- Additional Downloads

Videos

- Sloan – Company Overview

WARNING: Cancer and Reproductive Harm – www.P65Warnings.ca.gov

Sloan 10500 Seymour Ave, Franklin Park 800.982.5839 sloan.com

Details

- Flush Volume: 0.5 gpf (1.9 lpf)
- Finish: Polished Chrome (CP)
- Power Type: Hardwired (HW)
- Valve: Diaphragm
- Valve Body Material: Semi-red Brass
- Fixture Type: Urinal
- Fixture Connection: Top Spud
- Rough-in Dimension: 11.5” (292mm)
- Spud Coupling: 0.75” (19mm)
- Supply Pipe: 0.75” (19mm)
- Override: True Mechanical (TMO)

Features

- Includes the required wall plate and a purple wall flange to let users know reclaimed water is in use
- All organic rubber has been replaced with synthetic compounds
- Optional purple handle provides additional indication of reclaimed water use
- Critical components, including cover, valve body, control stop and sweat solder kit, are made of semi-red brass
- PERMEX® Synthetic Rubber Diaphragm with Dual Filtered Fixed Bypass
- Valve body, Cover, Tailpiece and Control Stop shall be in compliance with ASTM Alloy Classification for Semi-Red Brass
- Valve shall be in compliance to the applicable sections of ASSE 1037

Recommended specifications

Valve Body, Cover, Tailpiece and Control Stop shall be in conformance with ASTM Alloy Classification for Semi-Red Brass. Valve shall be in compliance with the applicable sections of ASSE 1037 and ANSI/ASME 112.19.2.

Electrical specifications

- Arming Delay: 8 seconds
- Control Circuit:
  - 6 VDC Input
  - 72 Hour Sentinel Flush
  - Solid State
- Sensor Range: 26”-32” (660 - 813mm)
- Transformers (Specify Separately):
  - EL-451/0345125 (Up to 6 Flushometers)
  - EL-386/0345095 (Up to 1 Flushometer)

Valve Operating Pressure (Flowing)

15-80 psi (103 - 552 kPa). Specific fixtures may require greater minimum flowing pressure - consult manufacturer requirements.

Warranty

View Warranty Information

Notes

All information contained within this document subject to change without notice.

*Compliant with ADA accessibility requirements when installed according to ADA standards.
WaterSense compliant when used with a 0.5 gpf (1.9 lpf) WaterSense fixture.

Looking for other variations of the ROYAL 186 SMOOTH product?
View the general spec sheet with all options.
Find a compatible urinal for this flushometer.
Find a compatible water closet for this flushometer.

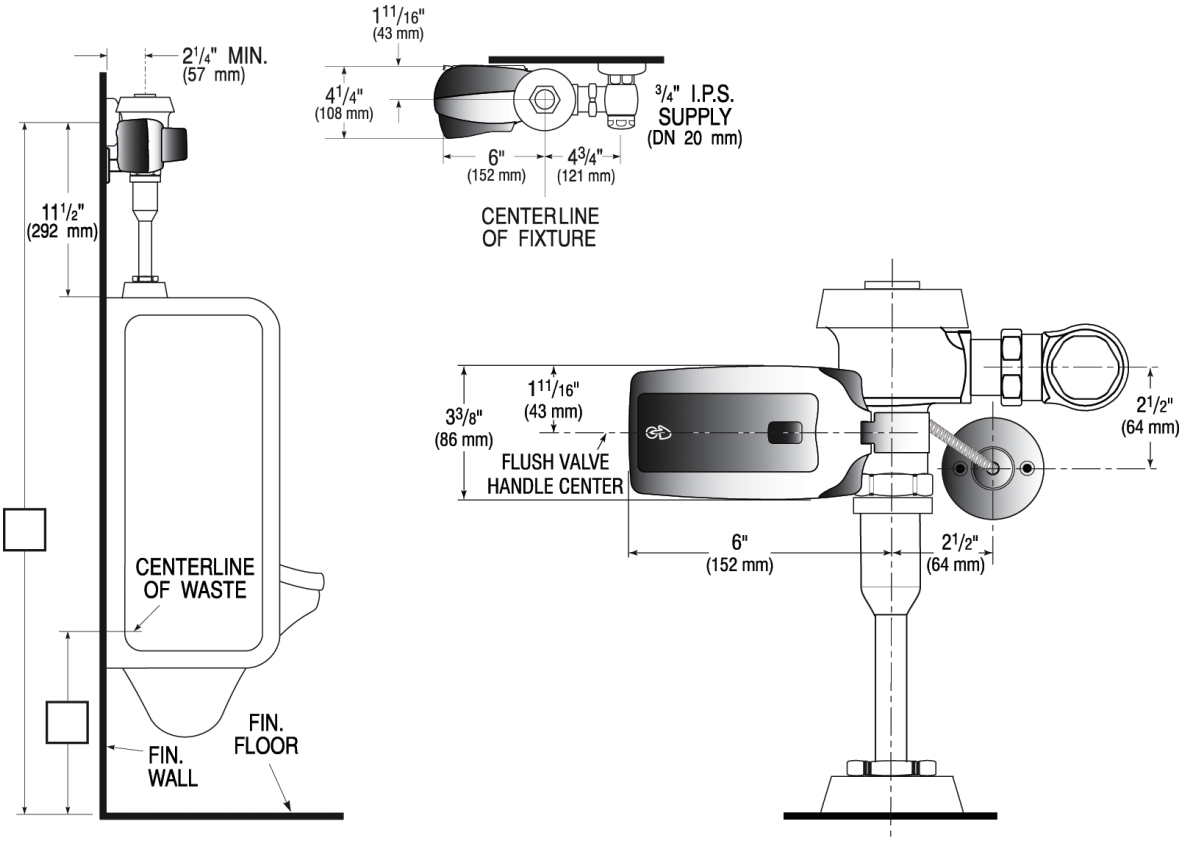
2 1/4" MIN.
(57 mm)
11 1/2"
(292 mm)
CENTERLINE
OF WASTE
FIN.
WALL
FIN.
FLOOR
1 11/16"
(43 mm)
4 1/4"
(108 mm)
3/4" I.P.S.
SUPPLY
(DN 20 mm)
6"
(152 mm)
4 3/4"
(121 mm)
CENTERLINE
OF FIXTURE
1 11/16"
(43 mm)
3 3/8"
(86 mm)
FLUSH VALVE
HANDLE CENTER
2 1/2"
(64 mm)
6"
(152 mm)
2 1/2"
(64 mm)