Variation Not Shown: Metal Button Panel Mount

**Regal® Manual Specialty Flushometer**

# REGAL BPW 1100-1.6-XL-CP

## Product description

1.6 gpf, XL Sweat Solder Adapter Kit, Polished Chrome Finish, Fixture Connection Top Spud, Single Flush, 12” Bedpan Spray Arm, Regal® Exposed Manual Specialty Water Closet Bedpan Washer Flushometer.

## Compliances & Certifications

(ADA Compliant*, BAA Compliant, IAPMO, cUPC Certified)

**Code 3989740**

## Finish

Polished Chrome (CP)

## Downloads

- BPW Exposed Installation Instructions.pdf
- Control Stop Repair and Maintenance Guide.pdf
- Flush Connections Flanges Repair and Maintenance Guide.pdf
- Additional Downloads

## Videos

- Sloan – Company Overview



WARNING: Cancer and Reproductive Harm – www.P65Warnings.ca.gov

Sloan 10500 Seymour Ave, Franklin Park 800.982.5839 sloan.com

## Details

- Flush Volume: 1.6 gpf (6.0 lpf)
- Finish: Polished Chrome (CP)
- Valve: Diaphragm
- Valve Body Material: Semi-red Brass
- Fixture Type: Water Closet
- Fixture Connection: Top Spud
- Rough-in Dimension: 26.5” (673mm)
- Spud Coupling: 1.5” (38mm)
- Supply Pipe: 1” (25mm)
- Adapter: XL Sweat Solder Adapter Kit (XL)

## Features

- Valve body, Cover, Tailpiece and Control Stop shall be in compliance with ASTM Alloy Classification for Semi-Red Brass
- Valve shall be in compliance to the applicable sections of ASSE 1037

## Recommended specifications

Valve Body, Cover, Tailpiece and Control Stop shall be in conformance with ASTM Alloy Classification for Semi-Red Brass. Valve shall be in compliance with the applicable sections of ASSE 1037 and ANSI/ASME 112.19.2.

## Valve Operating Pressure (Flowing)

15-80 psi (103 - 552 kPa). Specific fixtures may require greater minimum flowing pressure - consult manufacturer requirements.

## Warranty

View Warranty Information

## Notes

All information contained within this document subject to change without notice.

*Compliant with ADA accessibility requirements when installed according to ADA standards.

Looking for other variations of the REGAL BPW 1100 product?
View the general spec sheet with all options.
Find a compatible urinal for this flushometer.
Find a compatible water closet for this flushometer.

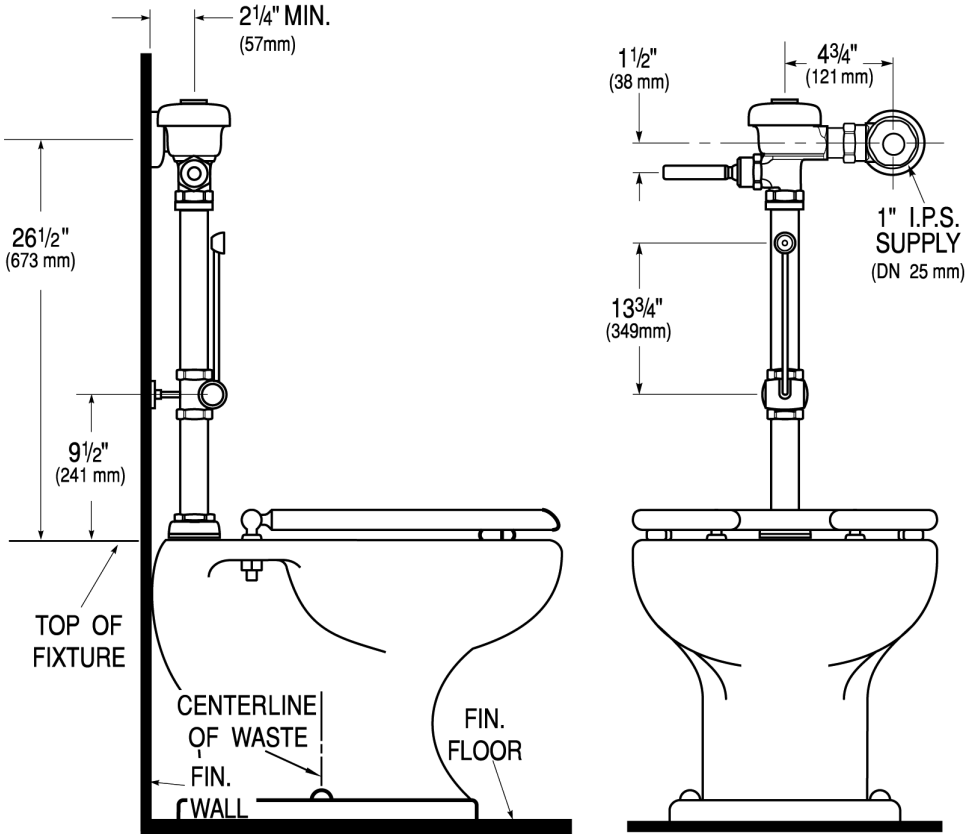
2¼" MIN.
(57mm)
26½"
(673 mm)
9½"
(241 mm)
TOP OF
FIXTURE
CENTERLINE
OF WASTE
FIN.
WALL
FIN.
FLOOR
1½"
(38 mm)
4¾"
(121 mm)
1" I.P.S.
SUPPLY
(DN 25 mm)
13¾"
(349mm)