Variations Not Shown: Anti-Flood Device and Metal Button Panel Mount

Royal® Manual Specialty Flushometer

ROYAL 603-1.6-RB-3-3/4-LDIM

Product description

1.6 gpf, Rough Brass Finish, Fixture Connection Rear Spud, Single Flush, 3.75” L Dimension, Standard size (Configured for WB-1-A wall box: not included-order separately) Wall Box, Royal® Concealed Manual Specialty Water Closet PWT Flushometer.

Compliances & Certifications

(BAA Compliant, IAPMO, Made in the USA, cUPC Certified)

Code 3918165

Finish

Rough Brass (RB)

Downloads

- Concealed Flushometer Installation Instructions for Stainless Steel Fixtures.pdf
- Control Stop Repair and Maintenance Guide.pdf
- Flush Connections Flanges Repair and Maintenance Guide.pdf
- Additional Downloads

Videos

- Sloan – Company Overview

WARNING: Cancer and Reproductive Harm – www.P65Warnings.ca.gov

Sloan 10500 Seymour Ave, Franklin Park 800.982.5839 sloan.com

Details

- Flush Volume: 1.6 gpf (6.0 lpf)
- Finish: Rough Brass (RB)
- Valve: Diaphragm
- Valve Body Material: Semi-red Brass
- Fixture Type: Water Closet
- Fixture Connection: Rear Spud
- Rough-in Dimension: 16” (406mm)
- Spud Coupling: 1.5” (38mm)
- Supply Pipe: 1” (25mm)
- L Dimension: 3.75” (95mm) (3-3/4-LDIM)
- Wall Box: Standard size (Configured for WB-1-A wall box: not included- order separately)

Features

- Royal®, Regal® and Sloan® Prison Flushometers feature all the performance benefits of standard concealed, diaphragm model Flushometers with added durability to withstand rough environments
- PERMEX® Synthetic Rubber Diaphragm with Dual Filtered Fixed Bypass
- Valve body, Cover, Tailpiece and Control Stop shall be in compliance with ASTM Alloy Classification for Semi-Red Brass
- Valve shall be in compliance to the applicable sections of ASSE 1037

Recommended specifications

Valve Body, Cover, Tailpiece and Control Stop shall be in conformance with ASTM Alloy Classification for Semi-Red Brass. Valve shall be in compliance with the applicable sections of ASSE 1037 and ANSI/ASME 112.19.2.

Valve Operating Pressure (Flowing)

15-80 psi (103 - 552 kPa). Specific fixtures may require greater minimum flowing pressure - consult manufacturer requirements.

Warranty

View Warranty Information

Notes

All information contained within this document subject to change without notice.

Looking for other variations of the ROYAL 603 product? View the general spec sheet with all options.

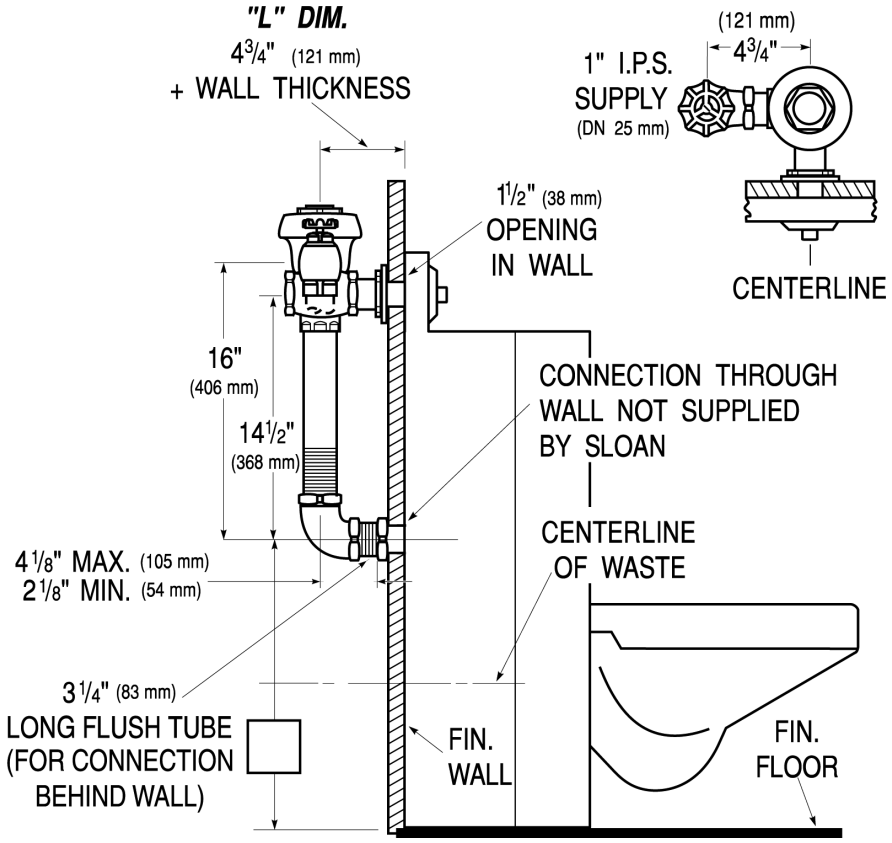
"L" DIM.
4 3/4" (121 mm)
+ WALL THICKNESS
(121 mm)
4 3/4"
1" I.P.S.
SUPPLY
(DN 25 mm)
1 1/2" (38 mm)
OPENING
IN WALL
CENTERLINE
16"
(406 mm)
14 1/2"
(368 mm)
CONNECTION THROUGH
WALL NOT SUPPLIED
BY SLOAN
CENTERLINE
OF WASTE
4 1/8" MAX. (105 mm)
2 1/8" MIN. (54 mm)
3 1/4" (83 mm)
LONG FLUSH TUBE
(FOR CONNECTION
BEHIND WALL)
FIN.
WALL
FIN.
FLOOR