Datasheet

COAX® cartridge MINI Pi12-2, holding cap

Article number: 0106924

- Two-stage COAX® cartridge - MINI - with small mounting dimensions.
- Vacuum level to 90 -kPa at low feed pressures.
- High operational reliability in case of fluctuating or low compressed-air pressure.
- Suitable for handling sealed objects.

Technical data

Description	Unit	Value
Material	-	Al, Nitrile (NBR), PA, SS
Temperature, max.	°C	80
Temperature, min.	°C	-10
Weight, max.	g	9.7
Weight, min.	g	2.6
Feed pressure, max.	MPa	0.7

Performance

Feed pressure	Air consumption	Vacuum flow (Nl/s) at different vacuum levels (-kPa)													Max vacuum
MPa	Nl/s	0	10	20	30	40	50	60	70	75	80	90	95	99	kPa
0.17	0.29	0.57	0.4	0.22	0.15	0.07	0	0	0	0	0	0	0	0	≥49
0.22	0.34	0.64	0.48	0.29	0.2	0.14	0.08	0.02	0	0	0	0	0	0	≥64
0.314	0.44	0.68	0.6	0.44	0.27	0.19	0.14	0.1	0.06	0	0.03	0	0	0	≥90
0.4	0.53	0.66	0.6	0.52	0.39	0.24	0.12	0.1	0.06	0	0.02	0	0	0	≥84

Feed pressure	Air consumption	Evacuation time (s/l) to reach different vacuum levels (-kPa)													Max vacuum
MPa	Nl/s	10	20	30	40	50	60	70	80	90	95	99	99.5	100.3	kPa
0.17	0.29	0.28	0.56	1.13	2.13	0	0	0	0	0	0	0	0	0	≥49
0.22	0.34	0.2	0.42	0.85	1.5	2.3	3	0	0	0	0	0	0	0	≥64
0.314	0.44	0.17	0.32	0.58	1.1	1.8	2.7	4	6.4	0	0	0	0	0	≥90
0.4	0.53	0.18	0.33	0.54	0.85	1.5	2.5	3.8	7.1	0	0	0	0	0	≥84

Feed pressure	Air consumption	Blow flow (Nl/s) at different pressure levels (-kPa)															Max pressure
MPa	Nl/s	0	10	20	30	40	50	60	70	80	90	100	110	120	130	140	kPa
0.6	0.75	1.37	1.365	1.36	1.345	1.33	1.225	1.12	1.03	1.03	1.03	1.03	1	0.95	0.86	0.79	≥0

Dimensional drawings

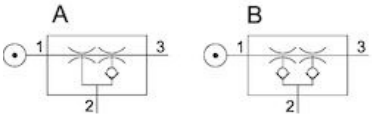

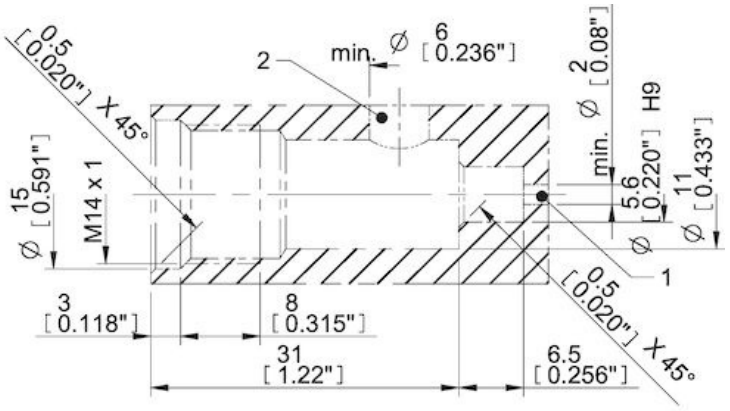

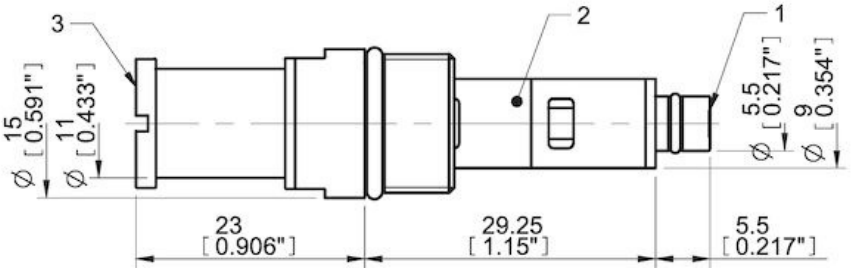

Values specified in this datasheet are tested at (unless otherwise stated):

- Room temperature (20°C [68°F] ± 3°C [5.5°F]).
- Standard atmosphere (101.3 [29.9 inHg] ± 1.0 kPa [0.3 inHg]).
- Compressed air quality, DIN ISO 8573-1 class 4.

Tolerance and accuracy:

- Feed pressure tolerance ±0.02 MPa [2.9 psi]
- Vacuum flow/evacuation time accuracy ±10%.

Accessories

0111977 | Silencer COAX® MINI